ft
m
∞
60
20
30
10
20
7
5
100
135
150
200
KR
AIP 22 16 11 8 5.6 4

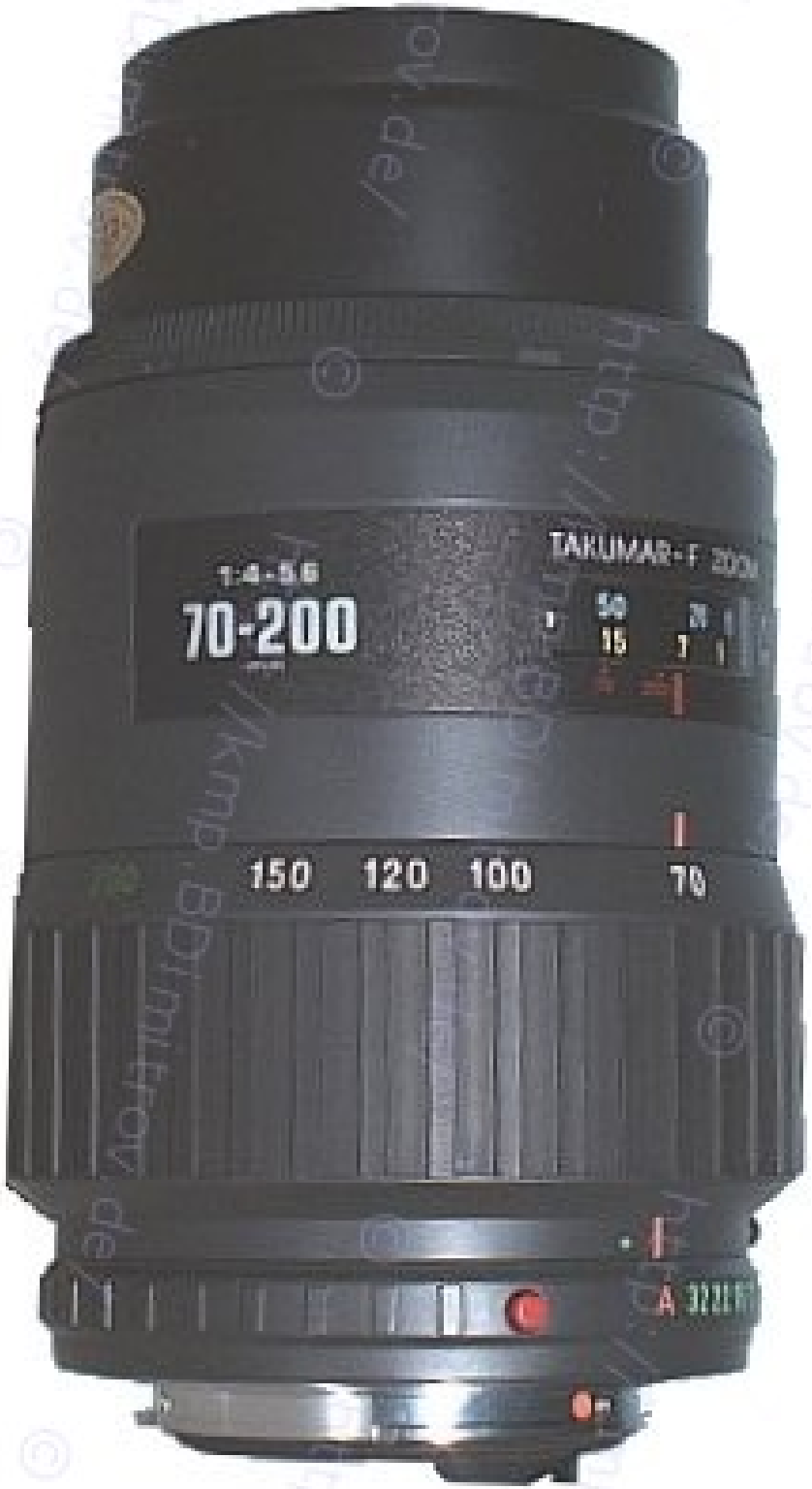
TAKUMAR-F ZOOM
1:4-5.6
70-200
150
120
100
70

1:4.5
ZOOM
BAYONET
200mm
Gary Schloss ©2000

ft
m
∞
30
10
15
5
f 70mm
22 16 11 8 5.6 4 2.8
ft
m
∞
30
10
15
5
35
40
50
60
f 70mm
22 16 11 8 5.6 4 2.8

35

X2DM
PENTAX
AUTOFOCUS

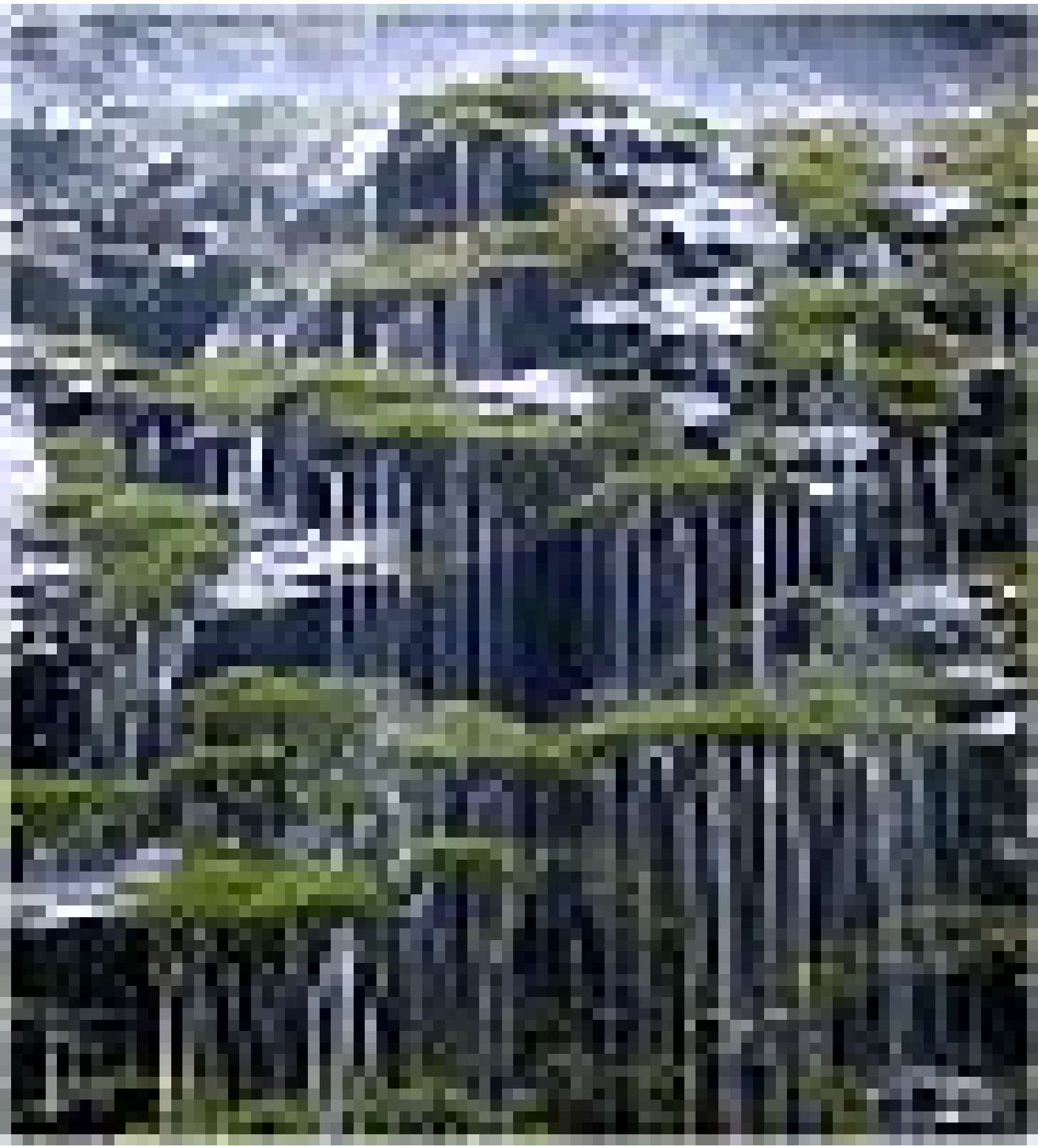

© Giampaolo Simonini, 2003
ASAHI
PENTAX
K2

© Andrew Hurst, 2004
KX
PENTAX

© Bojidar Dimitrov, 2002
ASAHI
PENTAX
KX

© Bojidar Dimitrov, 2002
ASAHI
PENTAX
KM

© Bojidar Dimitrov, 2002
K1000
PENTAX
SE

© your name, 2003
ASAHI
PENTAX
smc PENTAX-A 1:2

© Bojidar Dimitrov, 2002
PENTAX
ME F

© Bojidar Dimitrov, 2002
PENTAX
MG super

PENTAX
SE
Dan Mills © 2000

© Bojidar Dimitrov, 2003
PENTAX
ME

Mark Gosdin ©2000

© Bojidar Dimitrov, 2003

ASAHI
PENTAX
MV1
smc PENTAX-M 1:2 50mm
3509035 ASAHI OPT. CO., JAPAN

© Bojidar Dimitrov, 2002

© Christian Skofteland, 2003
ASAHI
PENTAX
DATA MLX

PENTAX
PROGRAM
PLUS
SELF

© Giampaolo Simonini, 2003
PENTAX
PROGRAM
PLUS

© Bojidar Dimitrov, 2002
PENTAX
program A
SELF

© Bojidar Dimitrov, 2002
PENTAX
SELF TIMER

PENTAX
SMC PENTAX-A 1:1.7 50mm
SELF TIMER
1574837

© Lee Ying Sun, 2003
PENTAX
years
PENTAX

PENTAX
TITANIUM

© Kim Coxon, 2005
PENTAX
ILX
PENTAX

© Bojidar Dimitrov, 2003
PENTAX

PENTAX
SF1
MANUAL
SERVO
SINGLE

PENTAX
MANUAL
SERVO
SINGLE AF

SF1N

PENTAX

© Bojidar Dimtirov, 2002
PENTAX
P50
PASSED
ASAHI
PENTAX

PENTAX
P30

© Bojidar Dimitrov, 2003
PENTAX

PENTAX

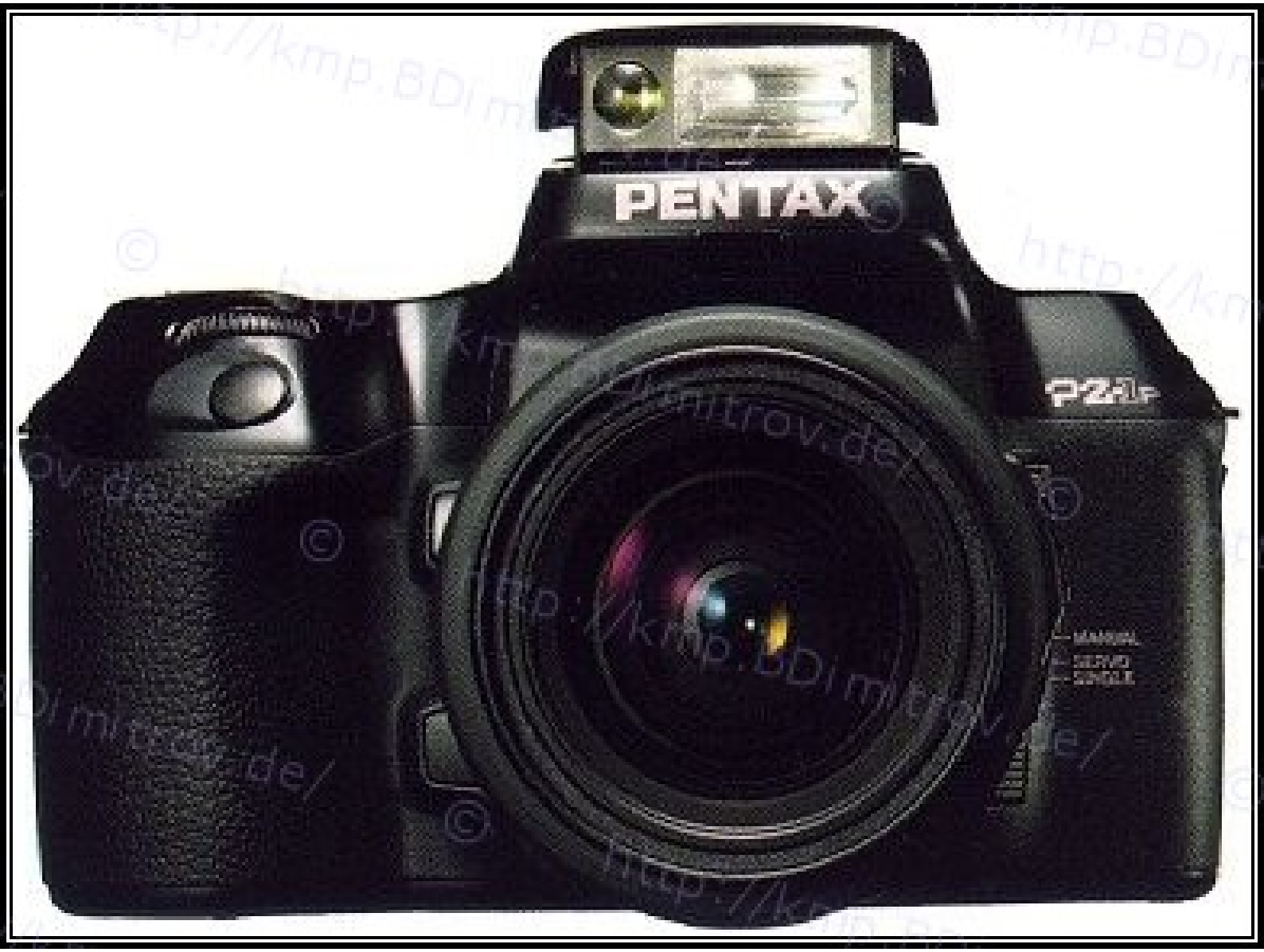
PENTAX
P-ZAF
MANUAL
SERVO
SINGLE

PENTAX

© E.R.N. Reed, 2002

PENTAX
PZ-20
MF
AF

PENTAX
P2-70
MF
AF

PENTAX
© Bozhidar Dimitrov
(bdd@cs.purdue.edu)

PENTAX
PENTAX
MZ-3

© Bojidar Dimitrov, 2003

PENTAX
MZ-5N

© Bojidar Dimitrov, 2002
PENTAX
ZX-5N
AF
MF
AF

PENTAX 28-70
70
50
35
28
ISO
A
L

© Bojidar Dimitrov, 2002
PENTAX
ZX-7
Av
MF
AF

PENTAX
MZ-7
Av
MF
AF

PENTAX
PENTAX
ZX-10
AF

© E.R.N. Reed, 2002
PENTAX
ZX-10
MF
AF

PENTAX
ZX-30
AF
MF

PENTAX
ZX-50
MF
AF

PENTAX
ZX-60
Av
MF
AF

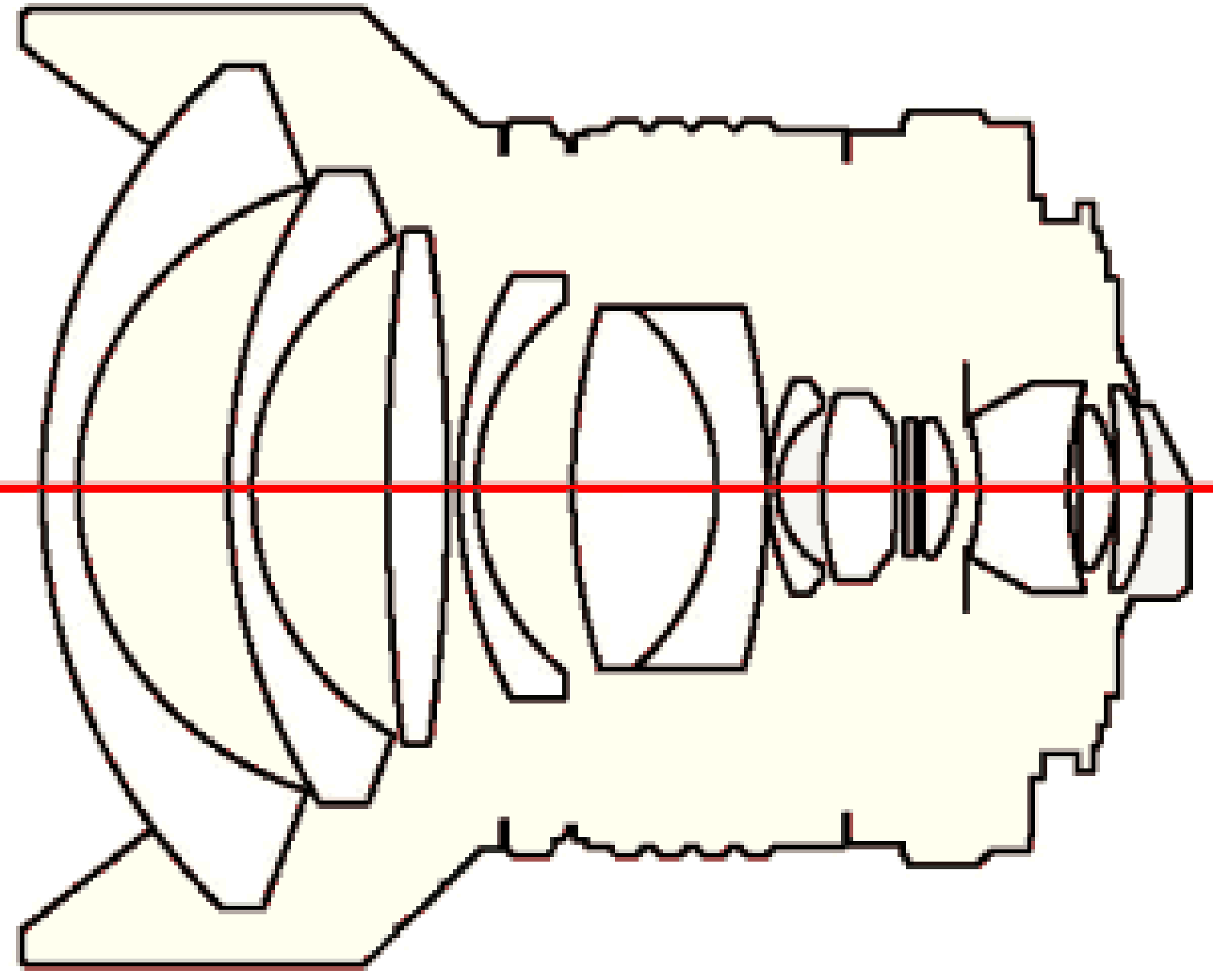

PENTAX
ZX-M

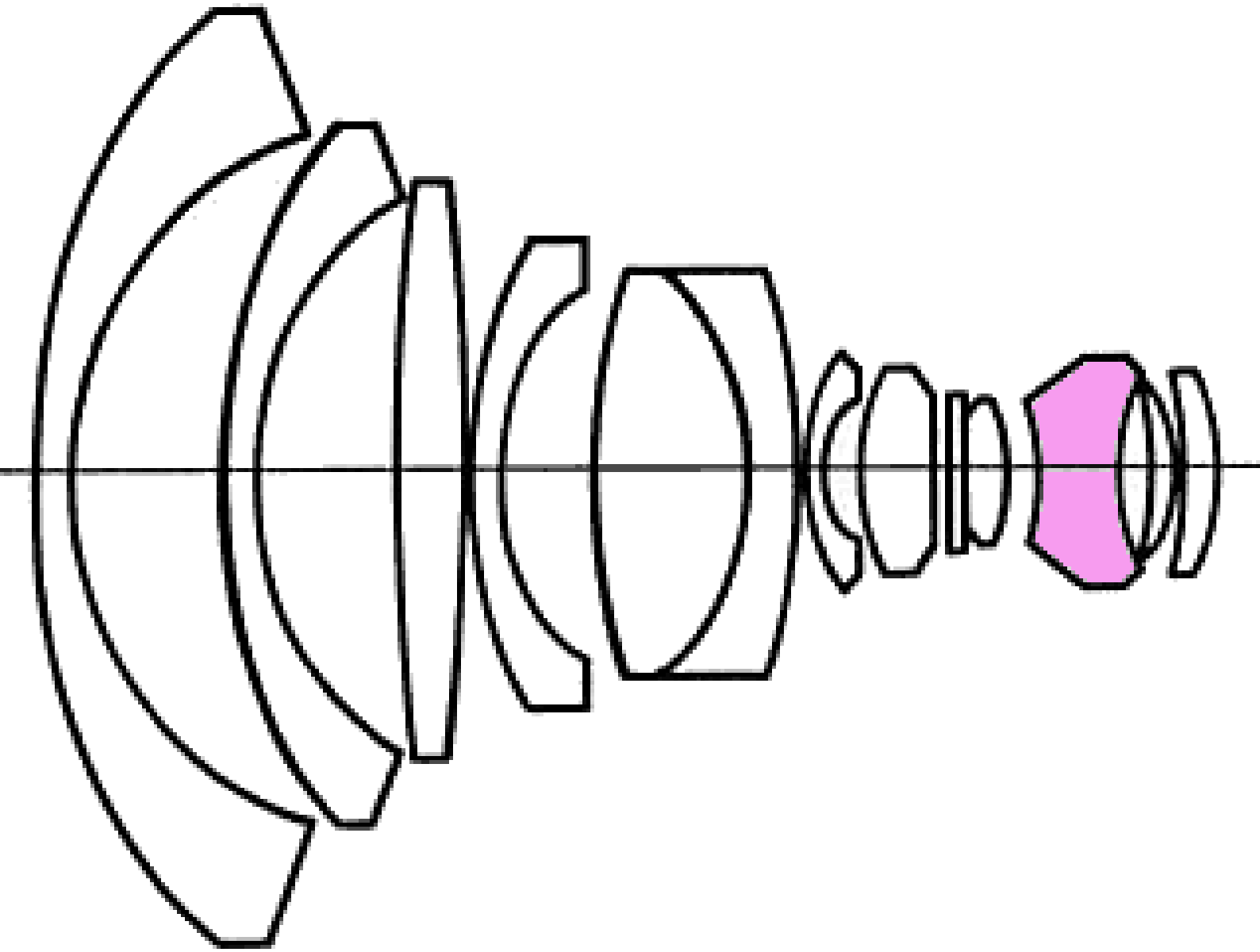

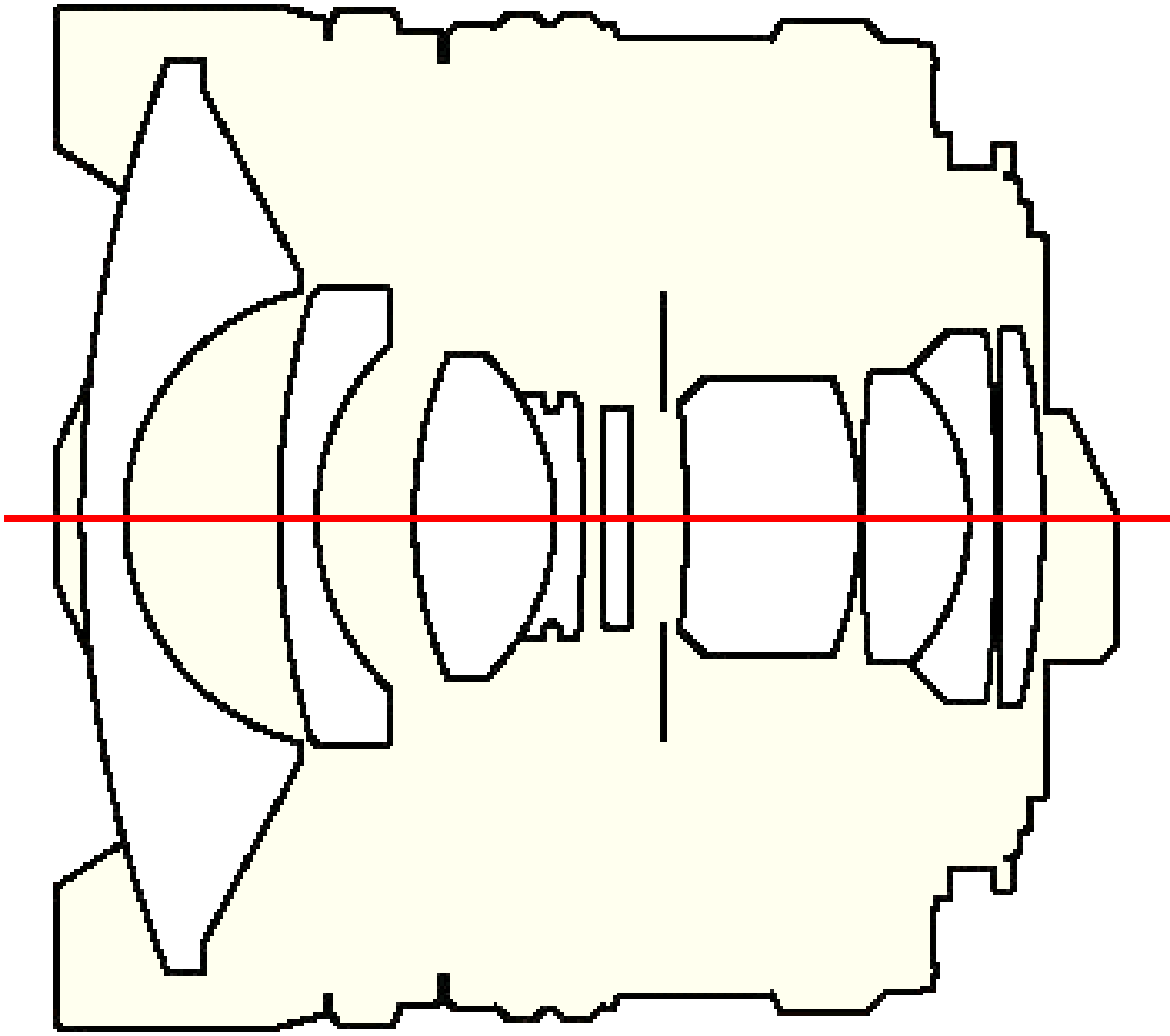

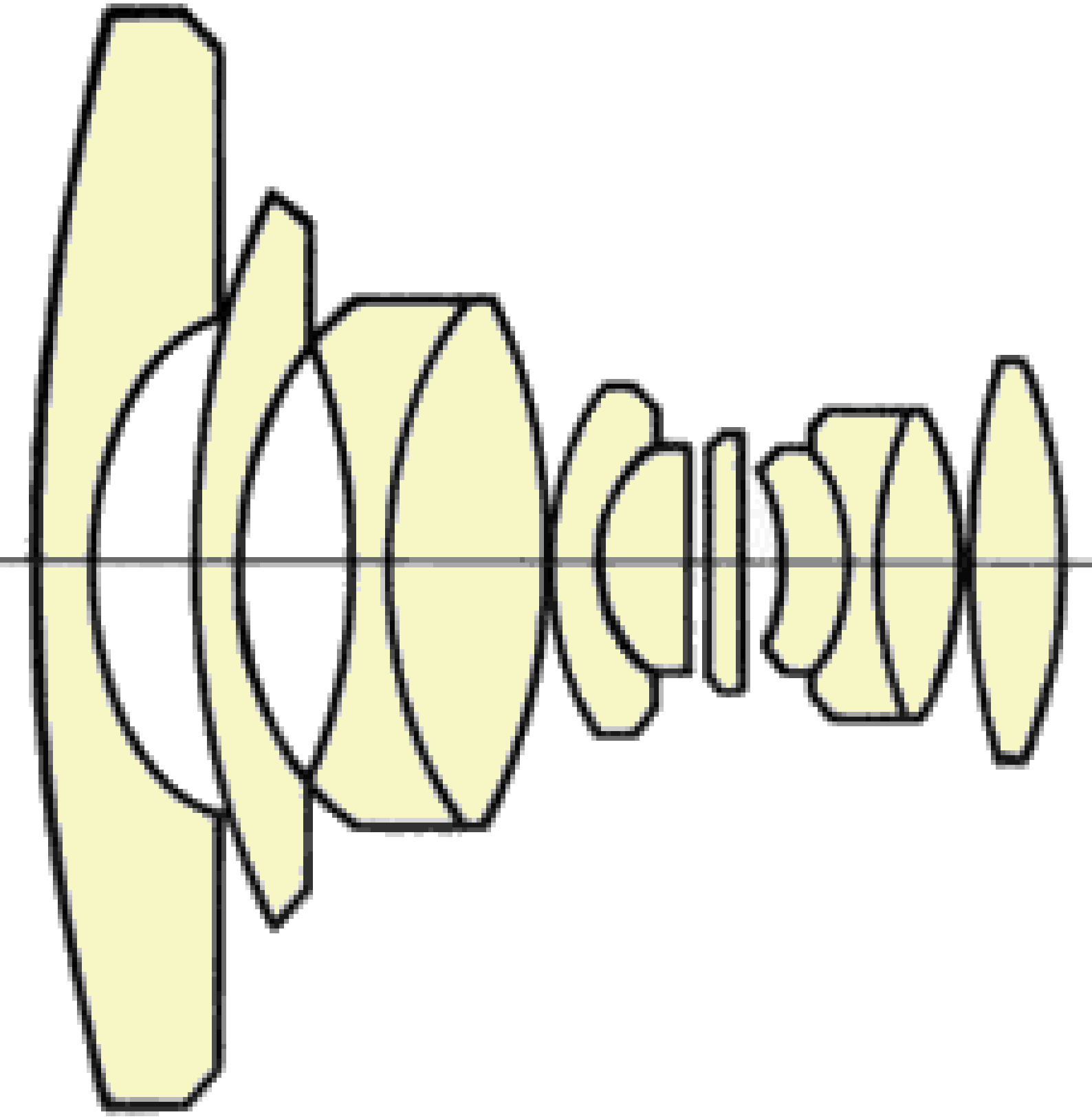

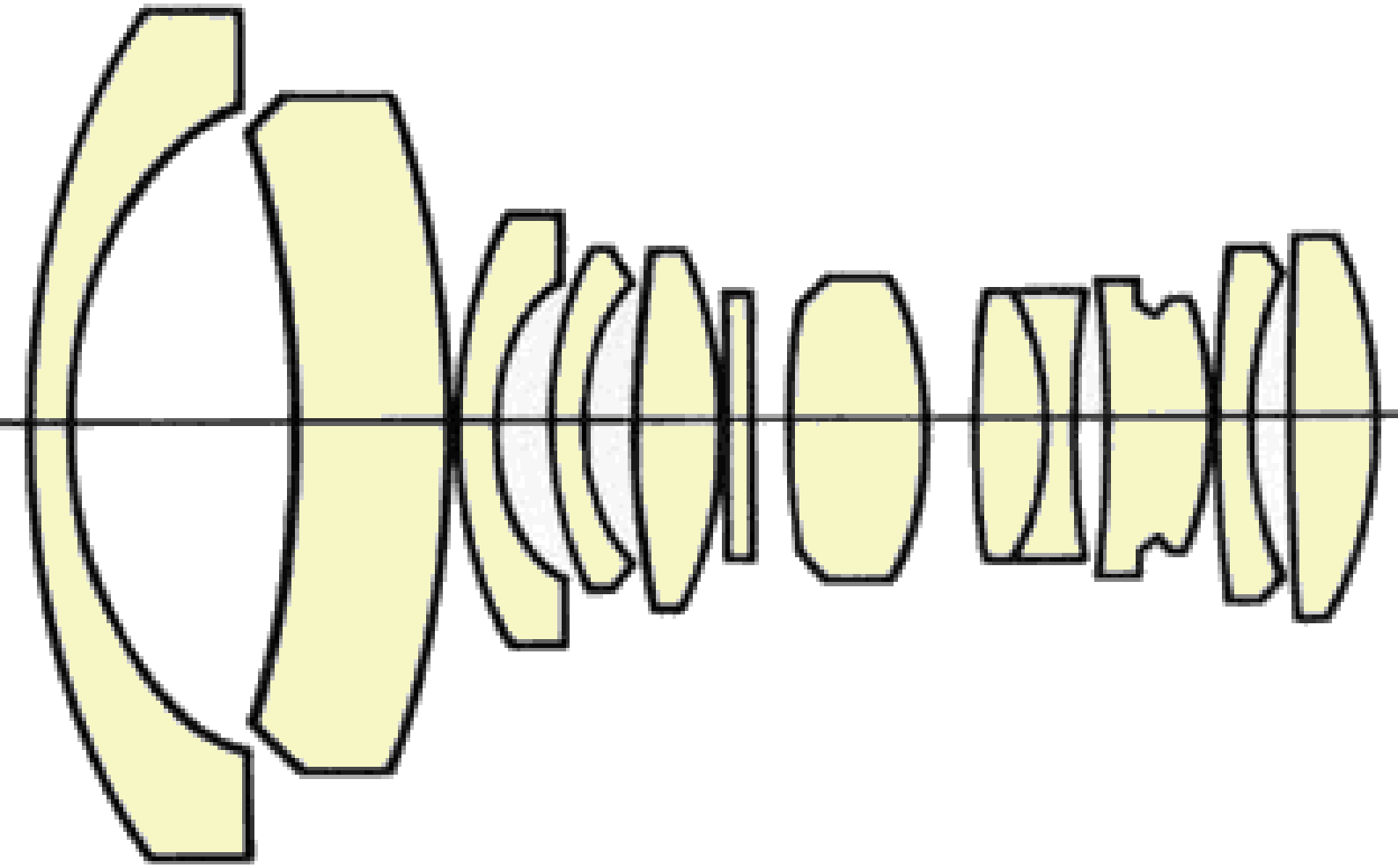

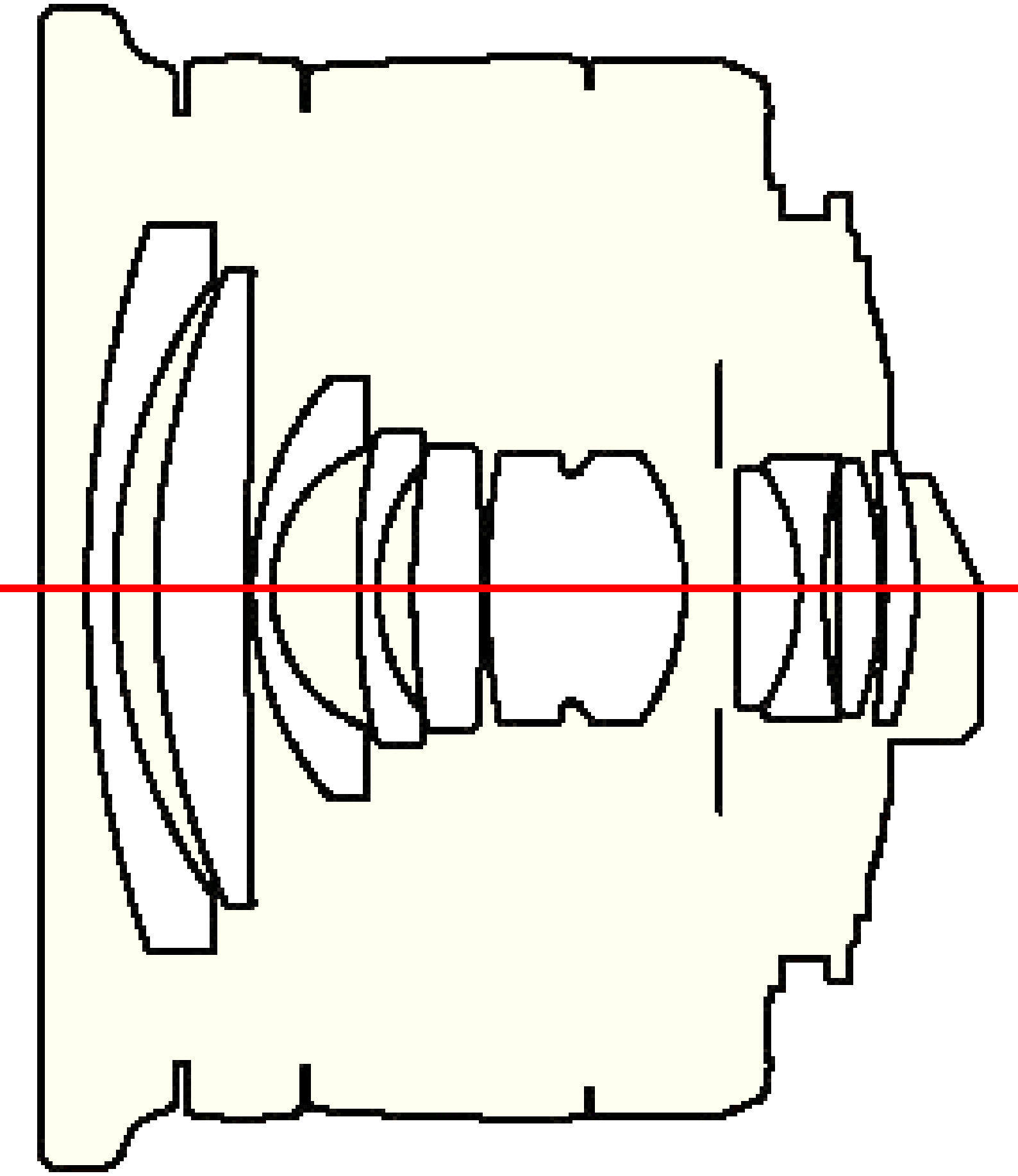

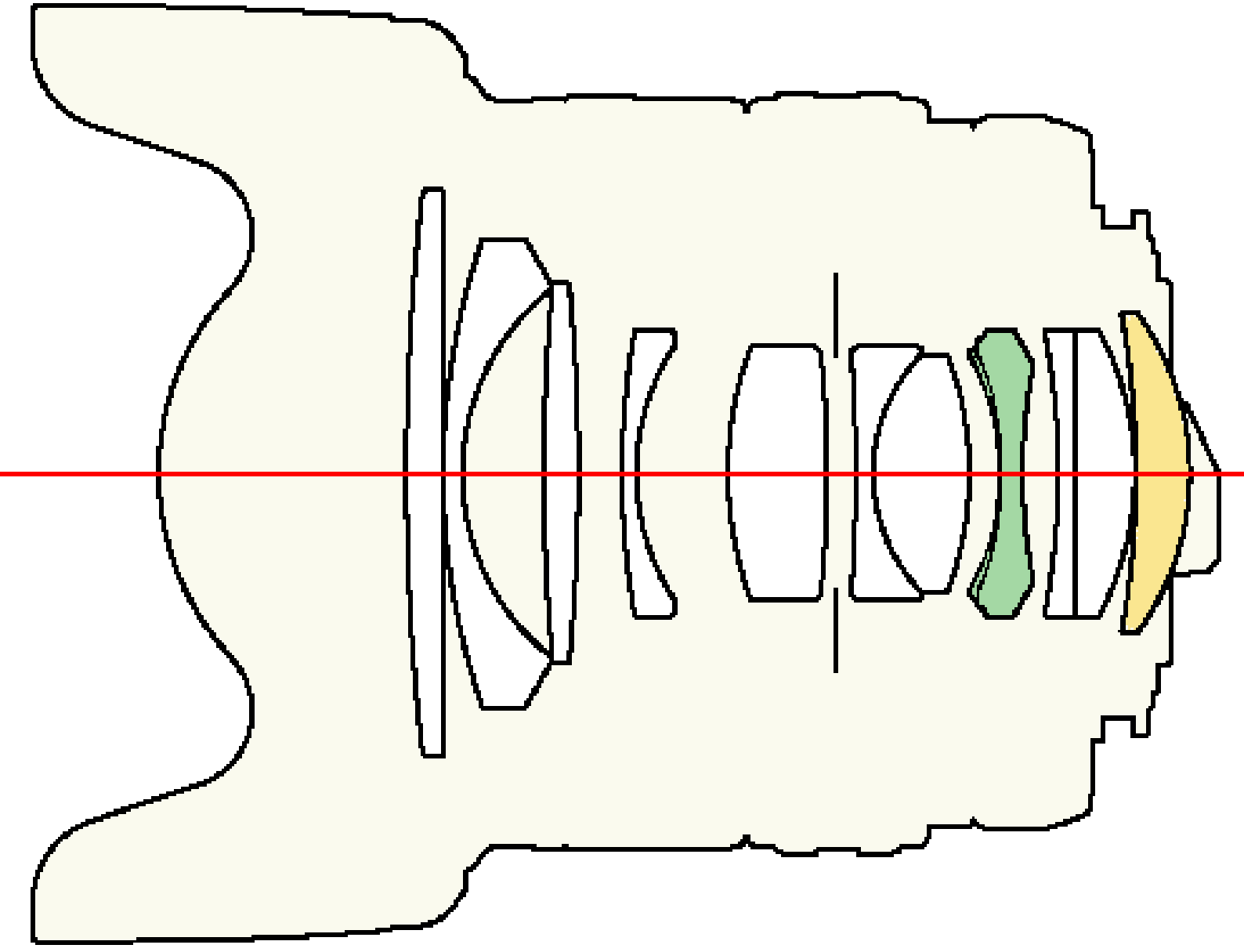

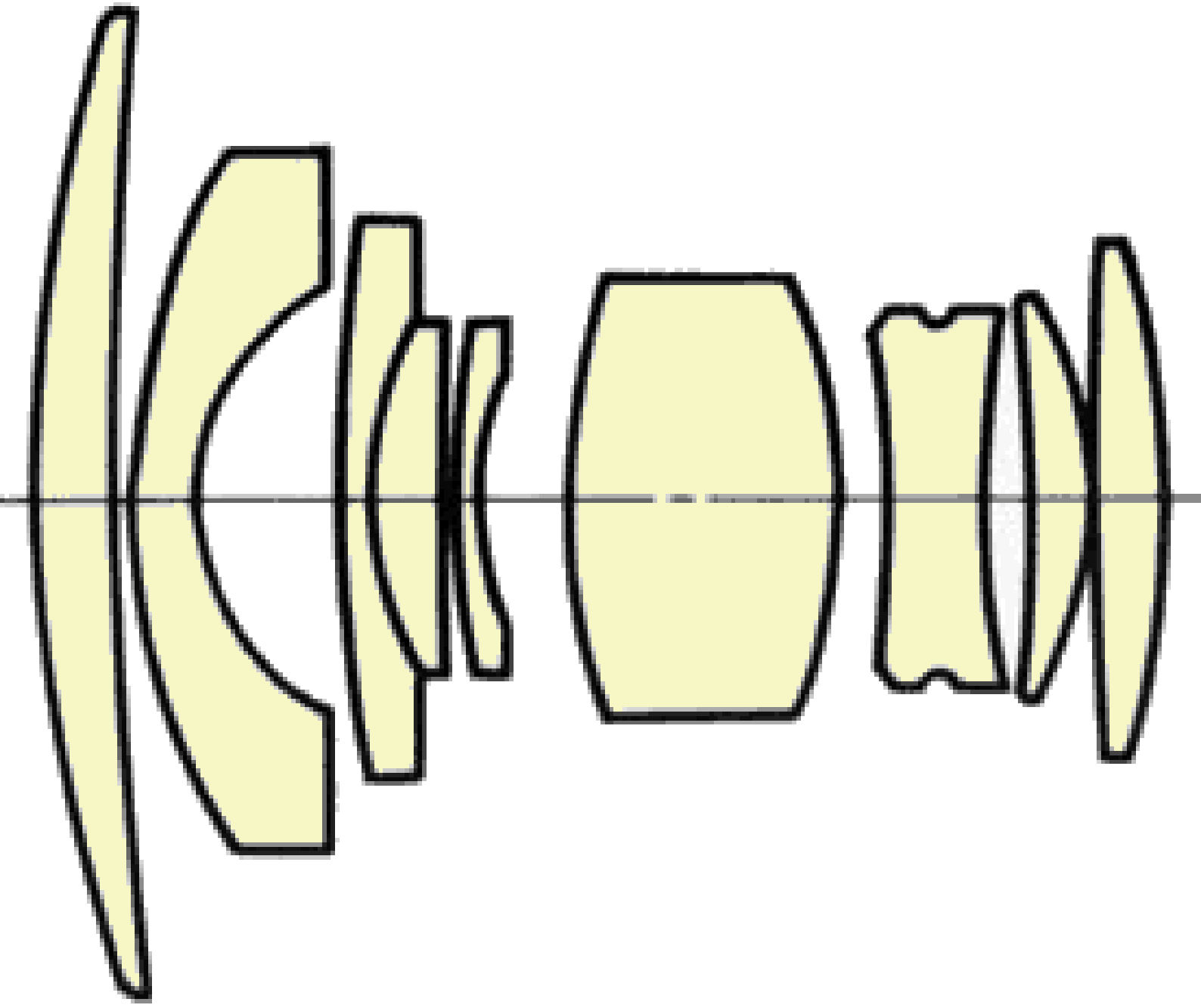

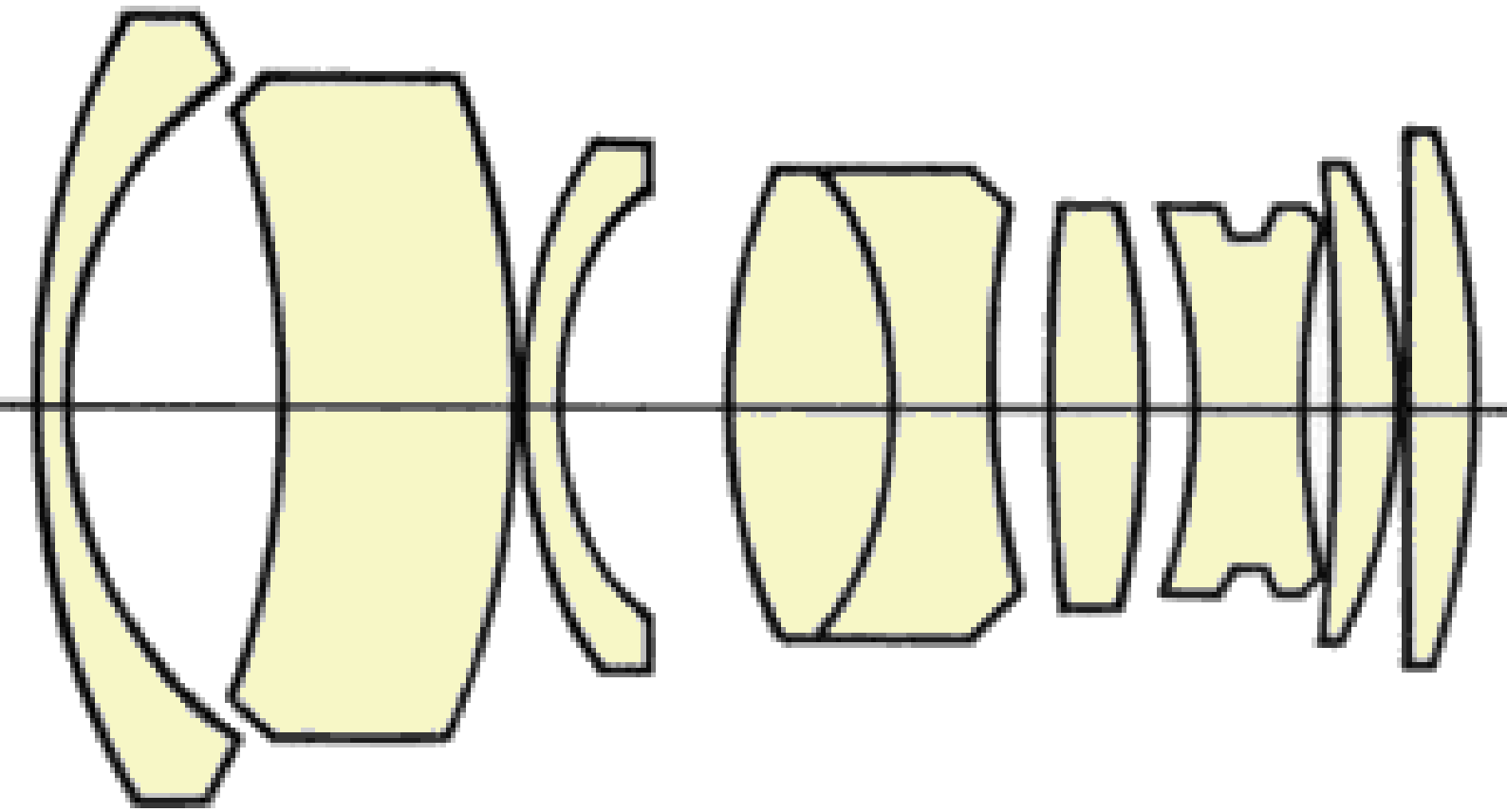

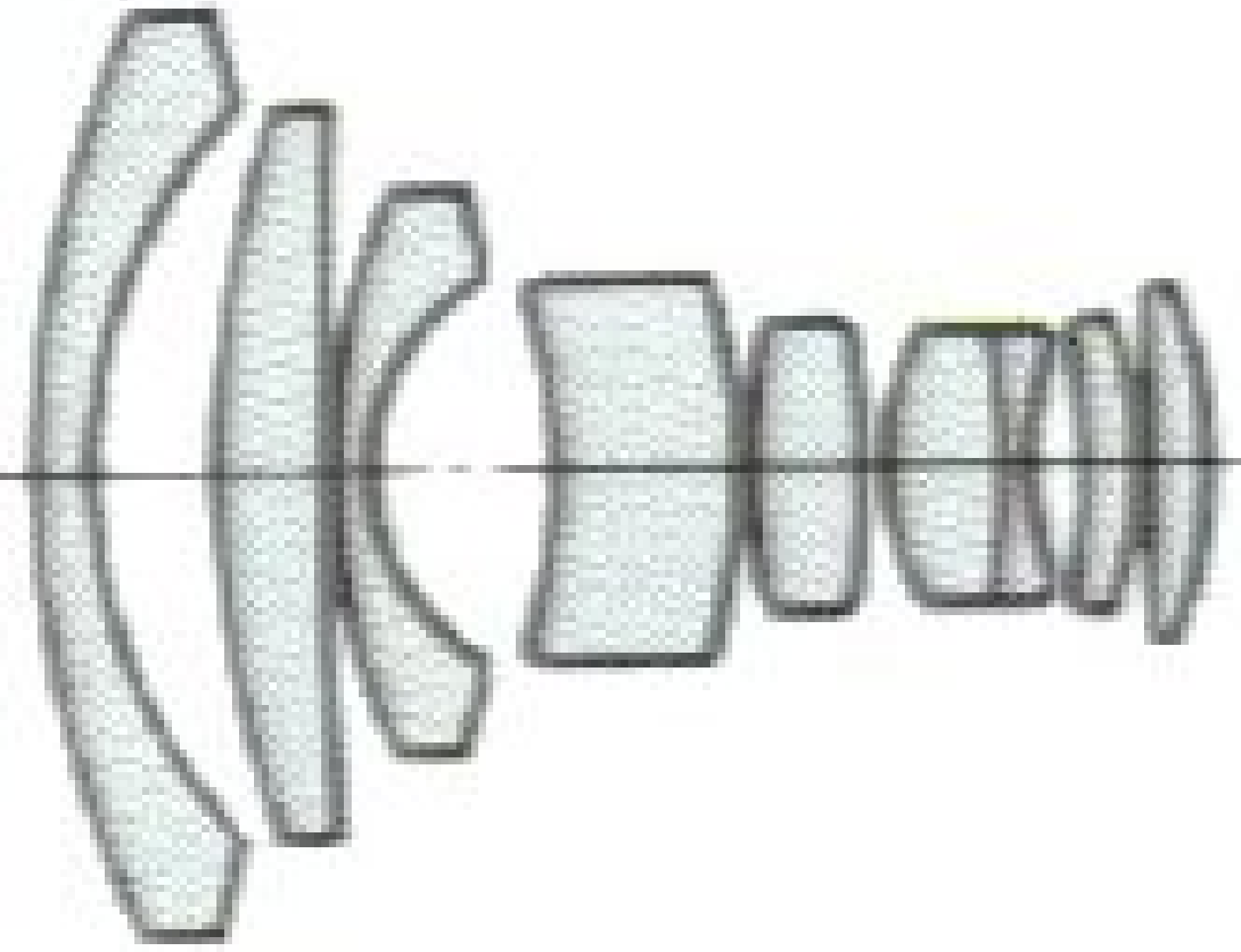

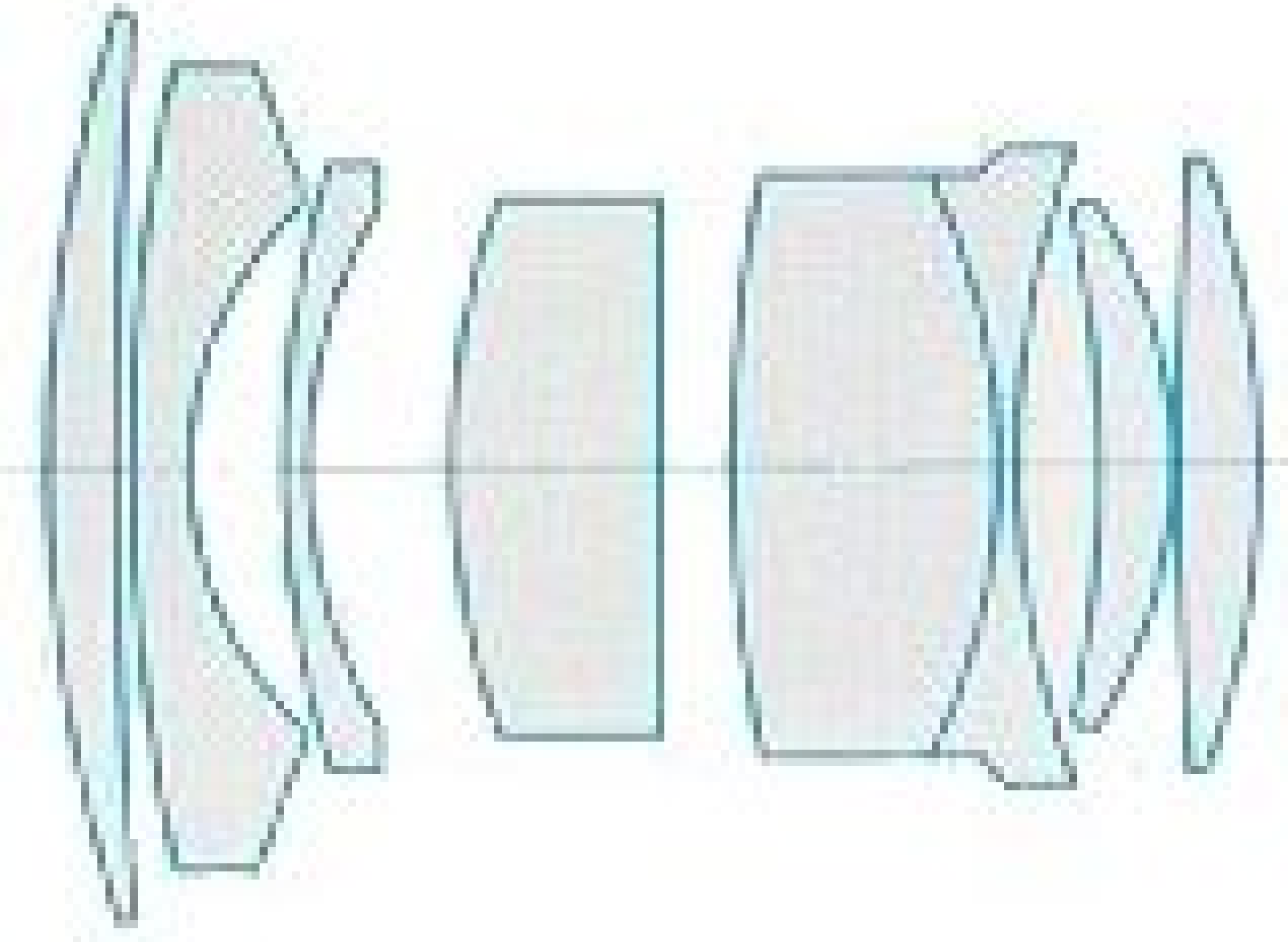

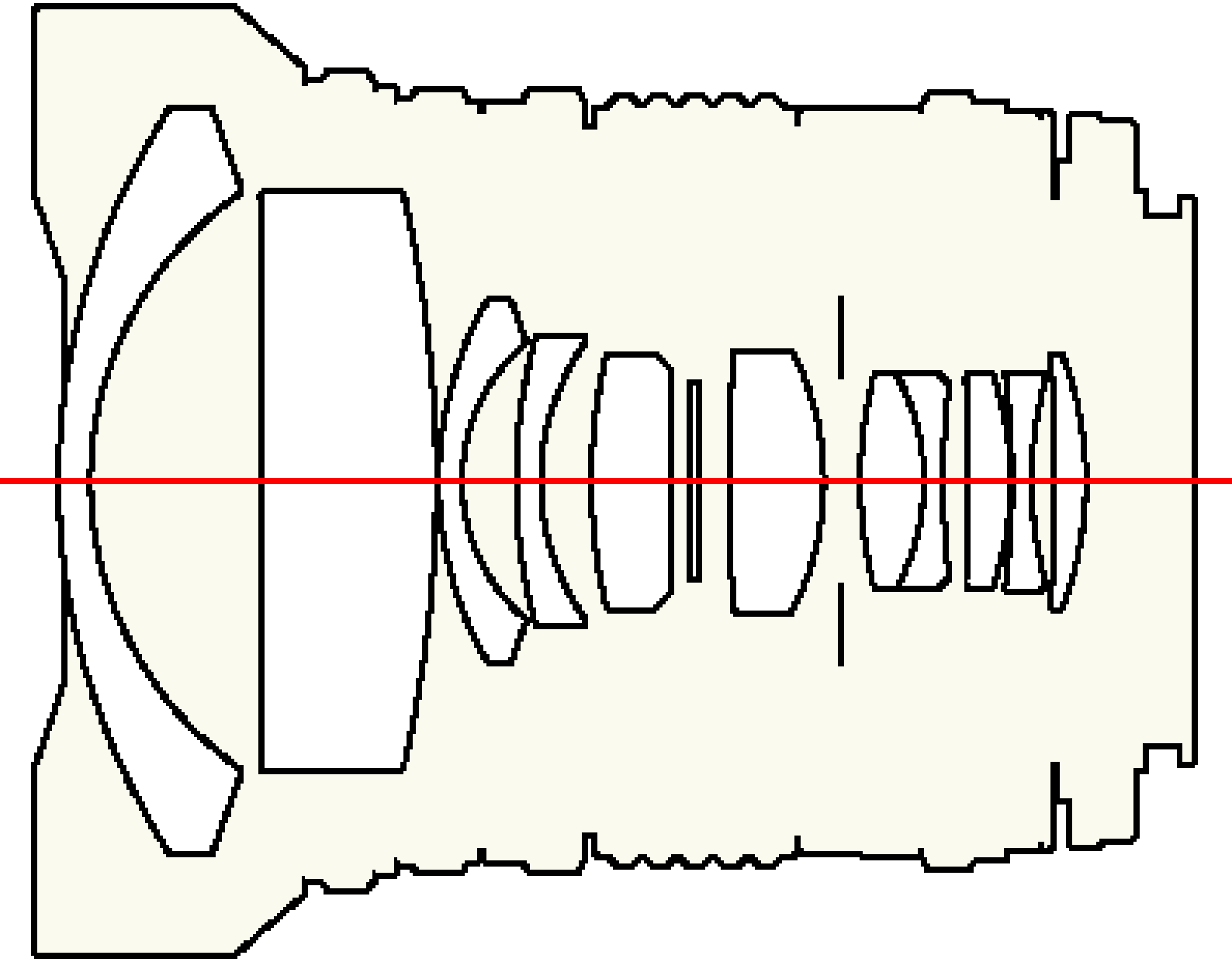

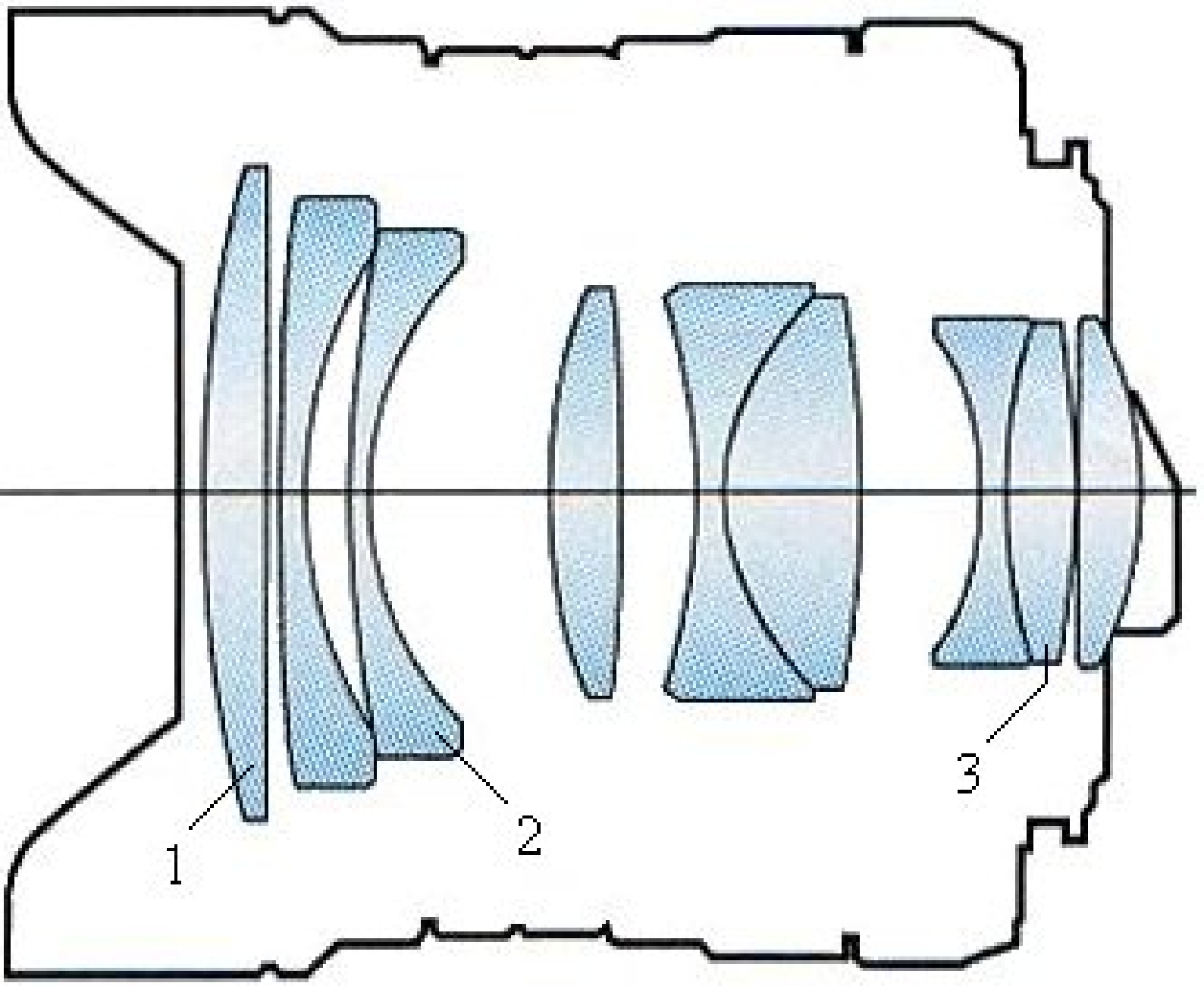

1 - high-refraction low-dispersion element
2 - extra-low dispersion element (ED)
3 - molded aspherical glass element (AL)

© Bojidar Dimitrov, 2003

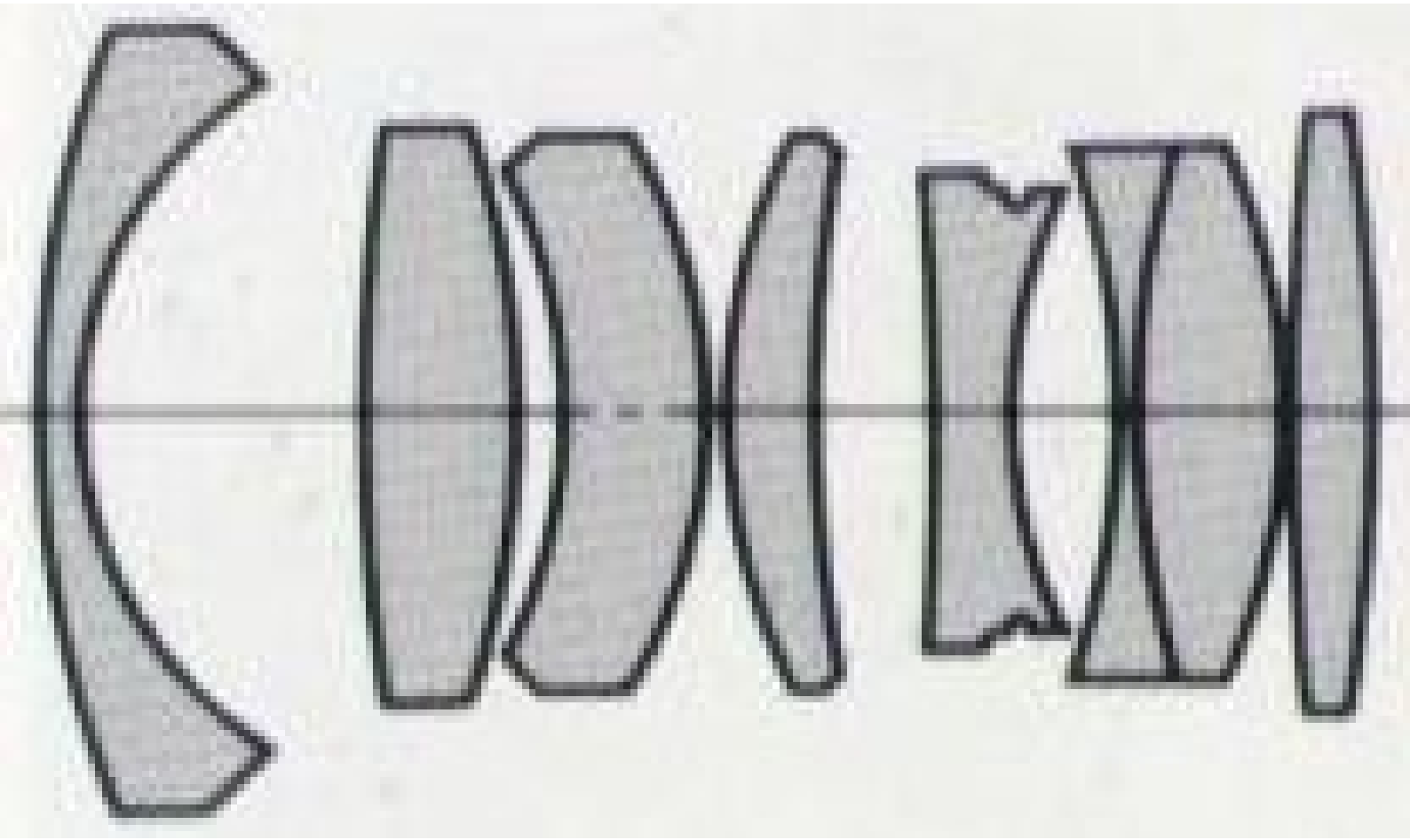

© Bojidar Dimitrov, 2004
SMC PENTAX 1:1.4 35mm

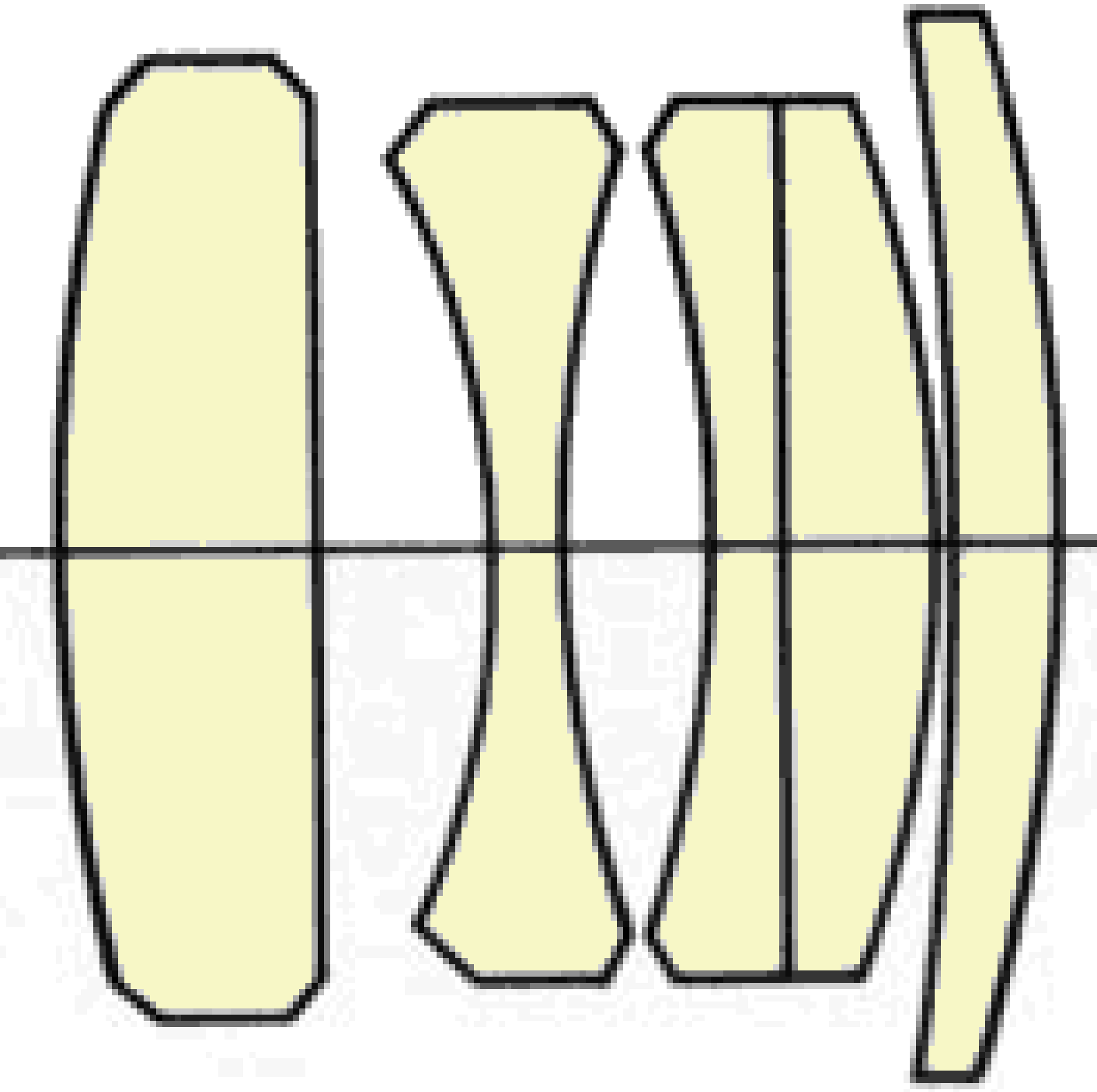

AD.BD

© Rob Studdert - Digital Image Studio

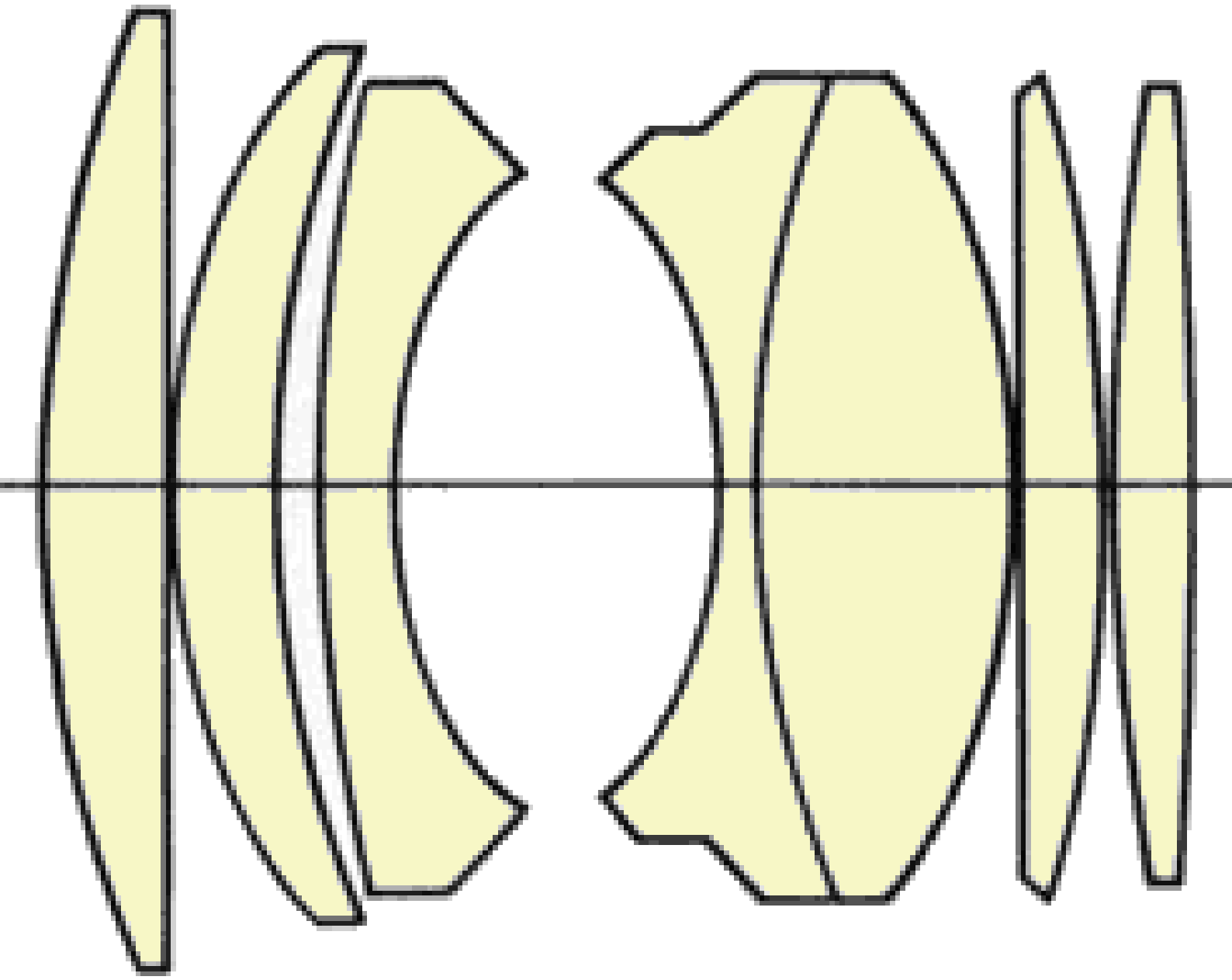

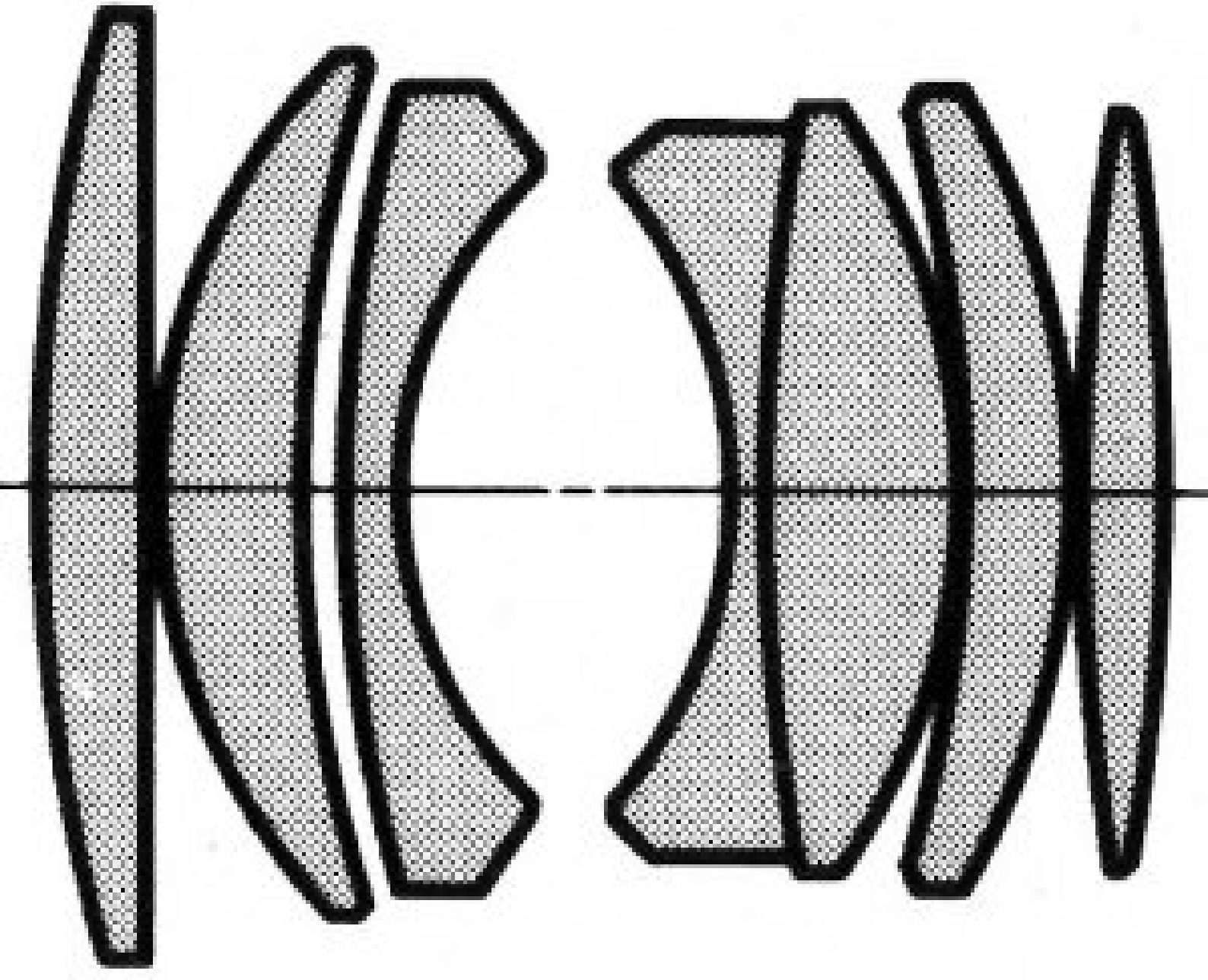

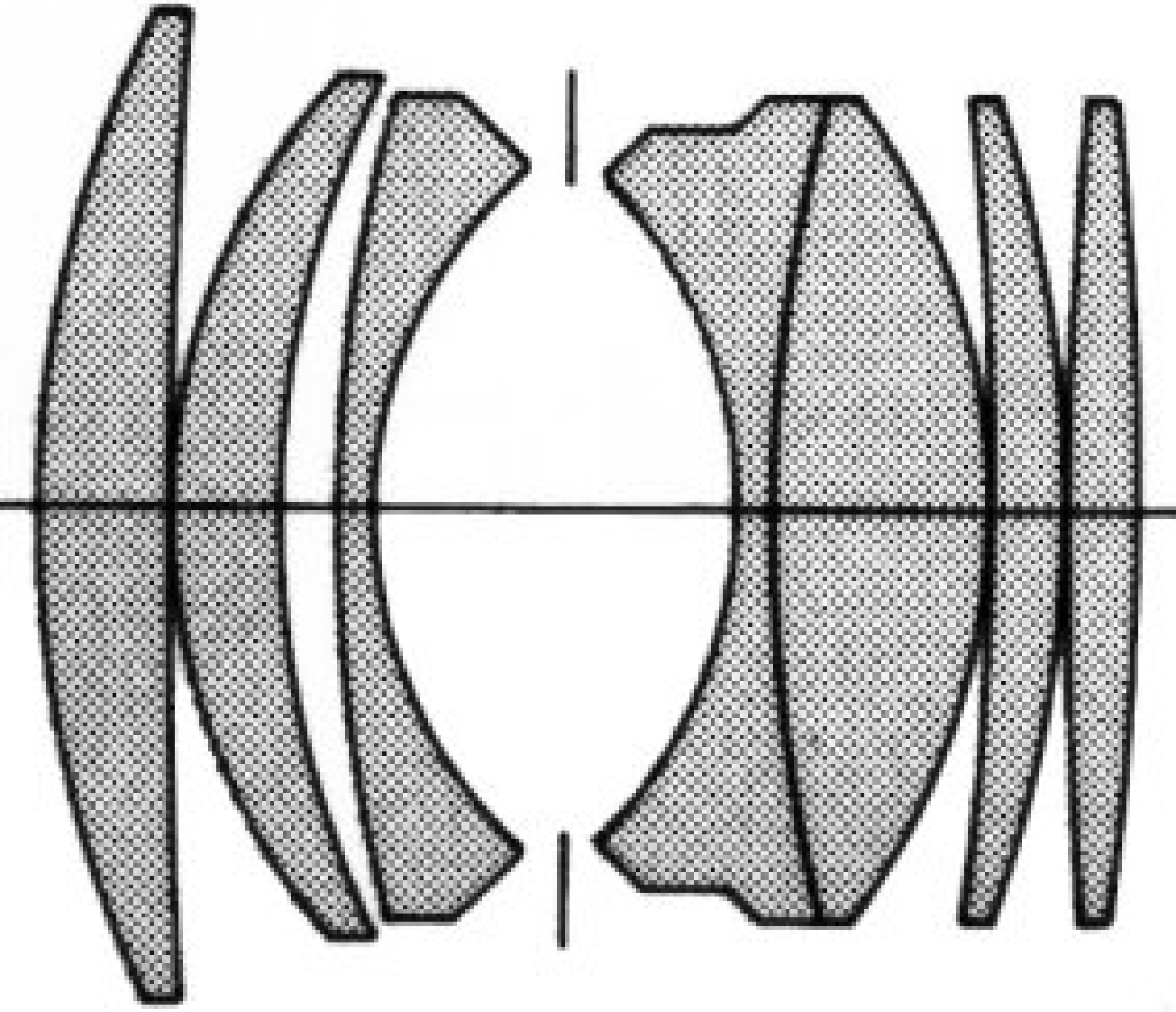

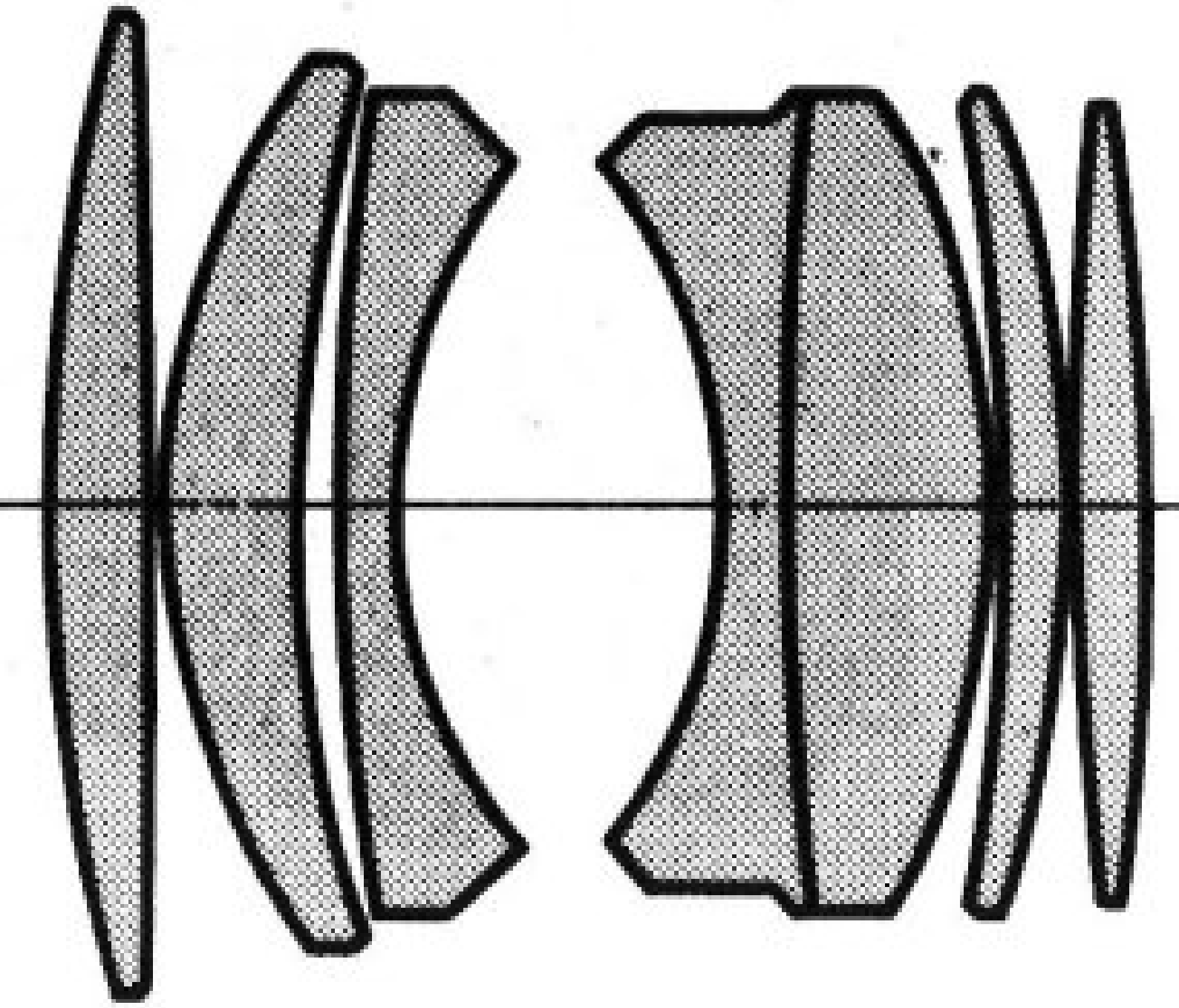

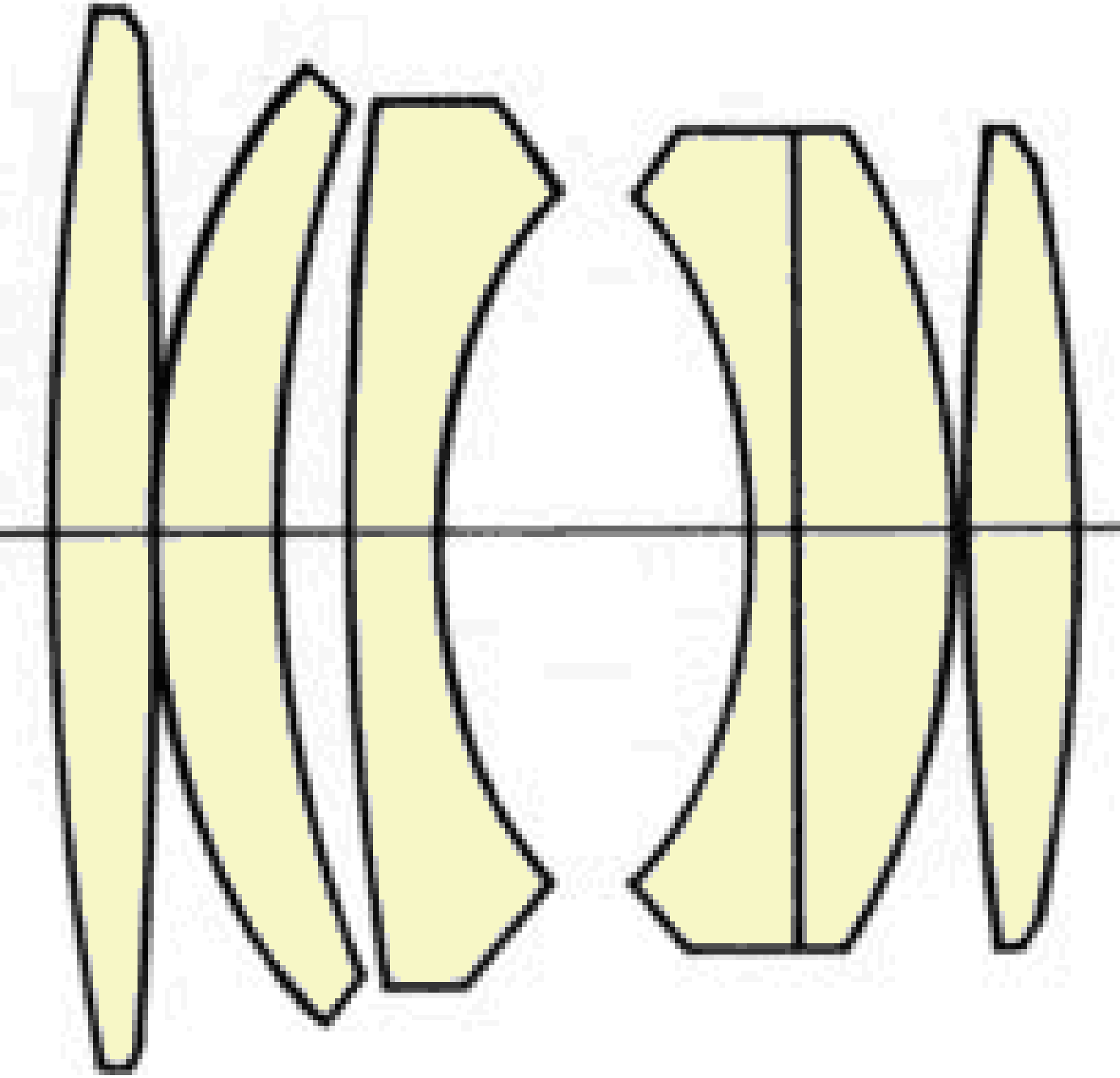

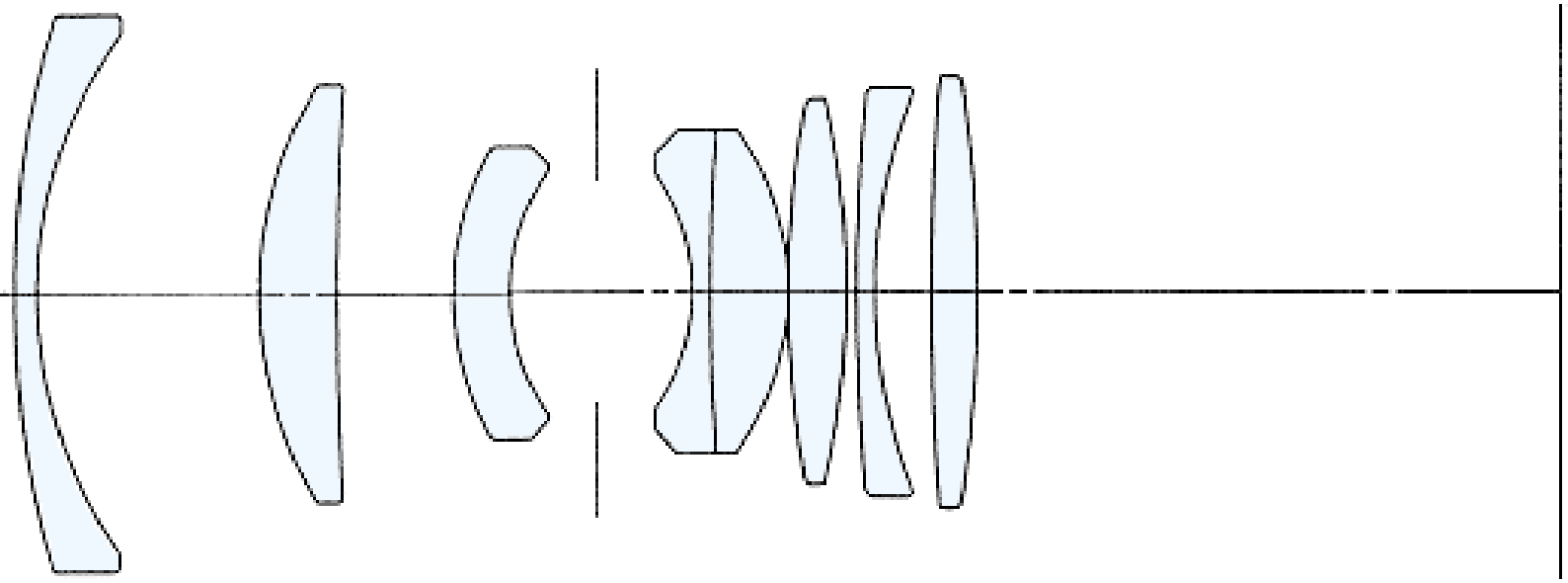

© Bojidar Dimitrov, 2002

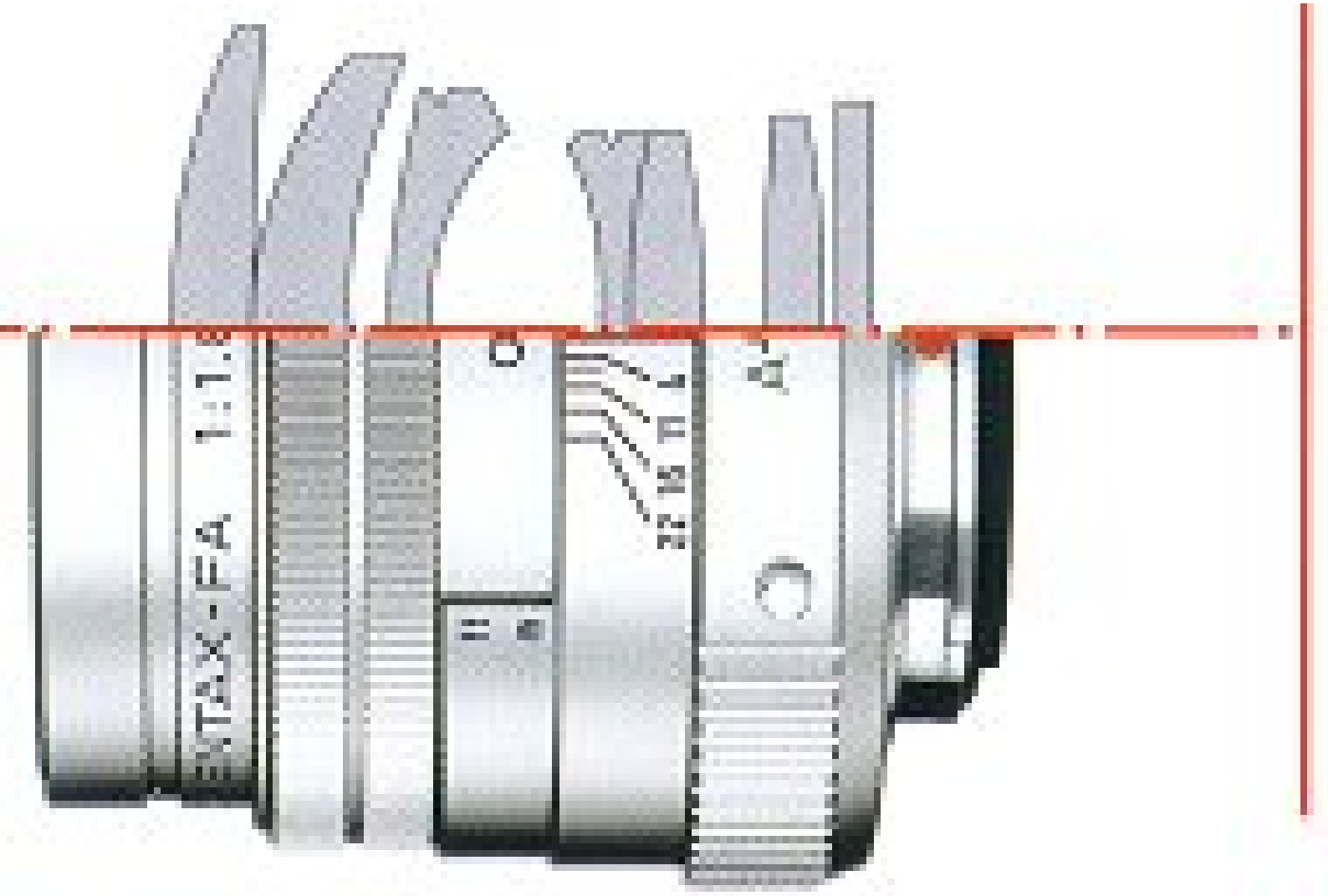

© Bojidar Dimitrov, 2003

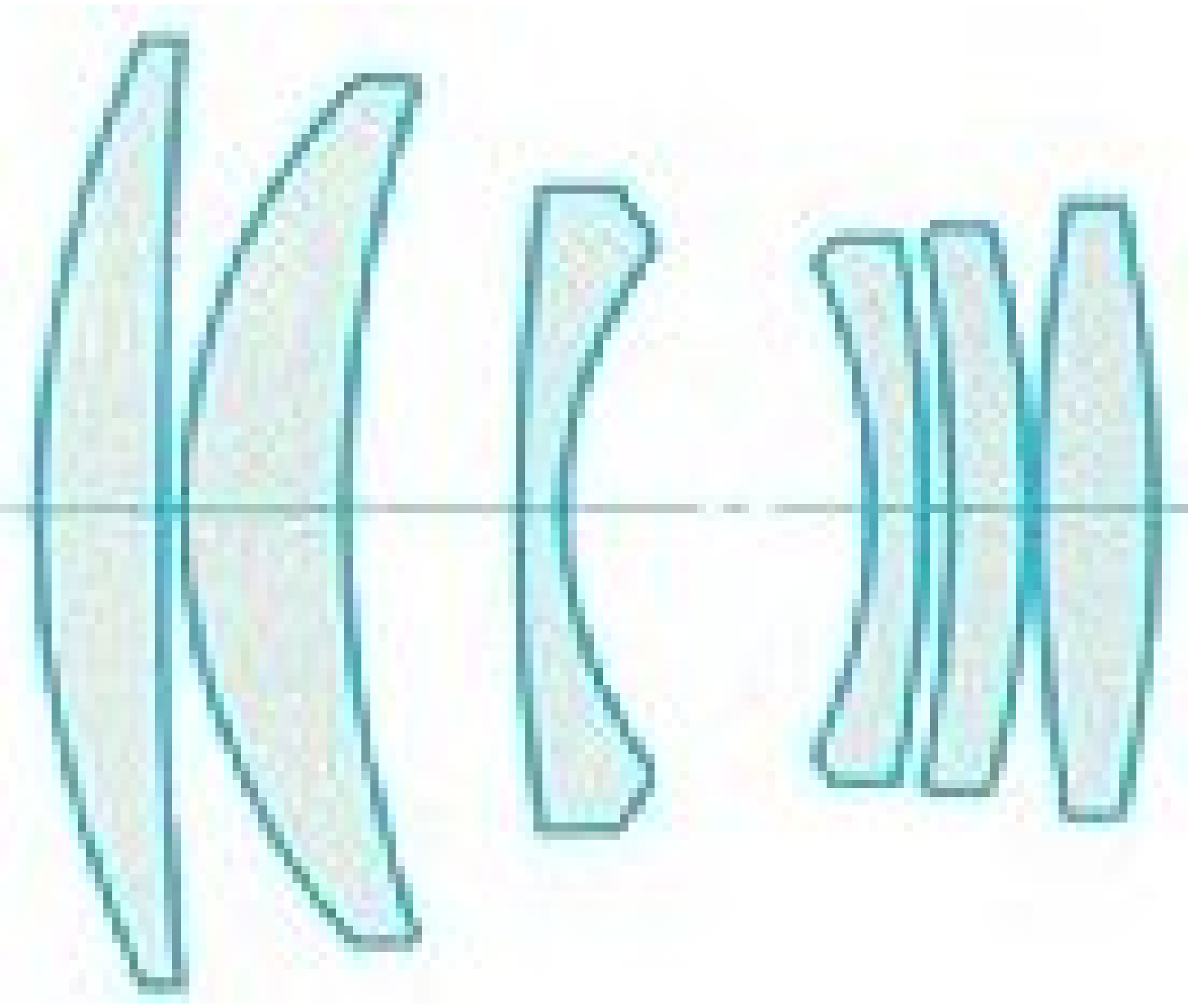

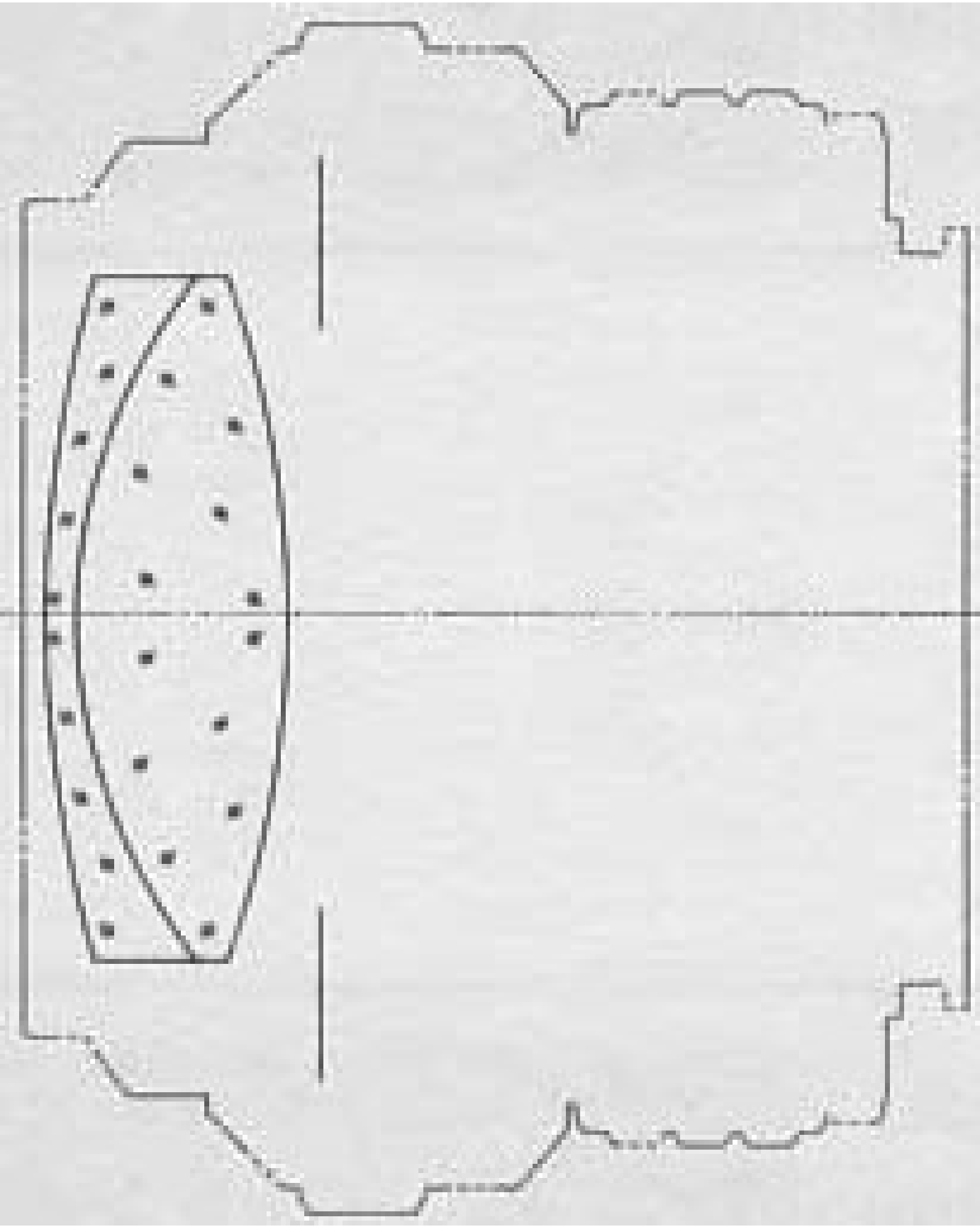

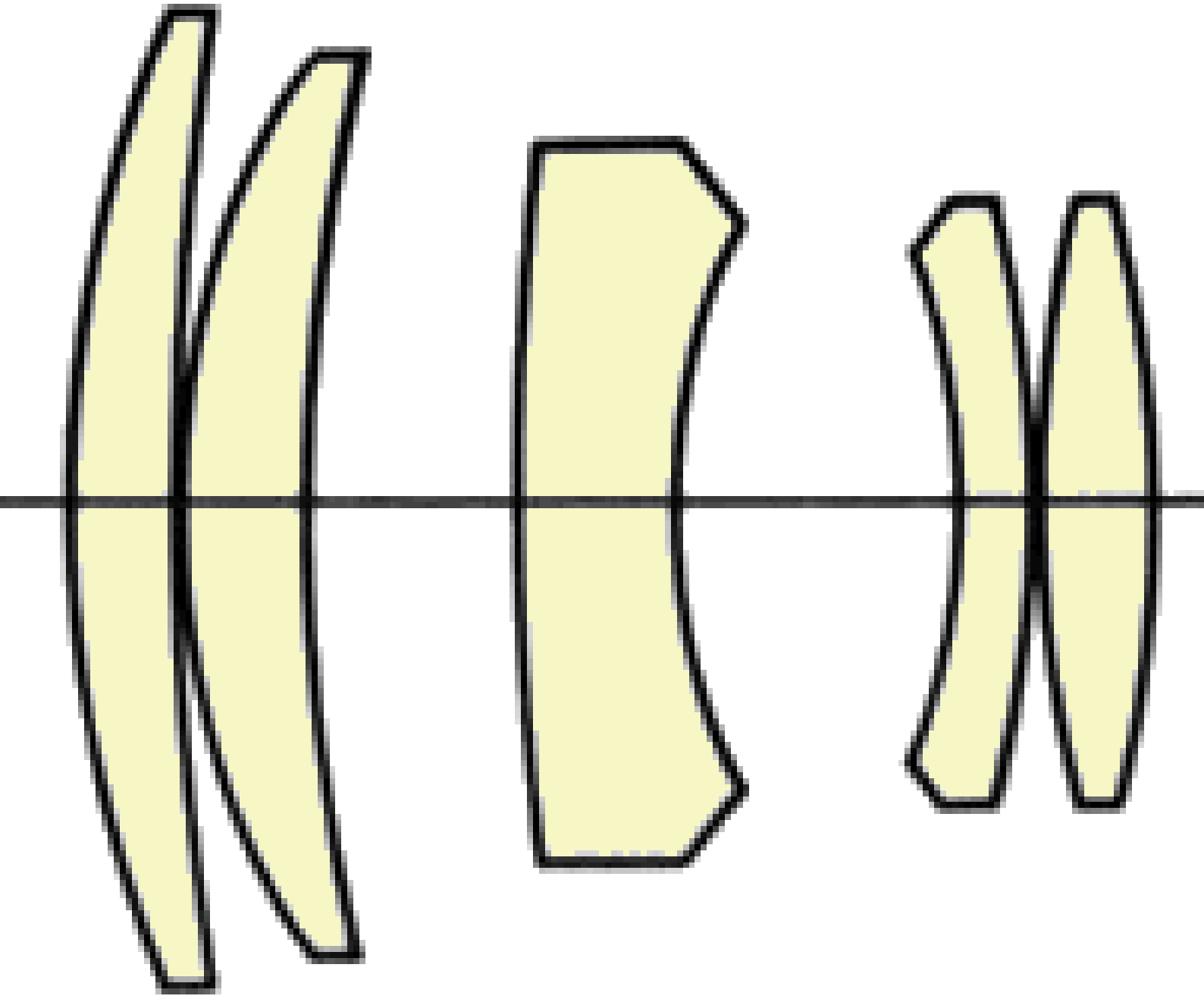

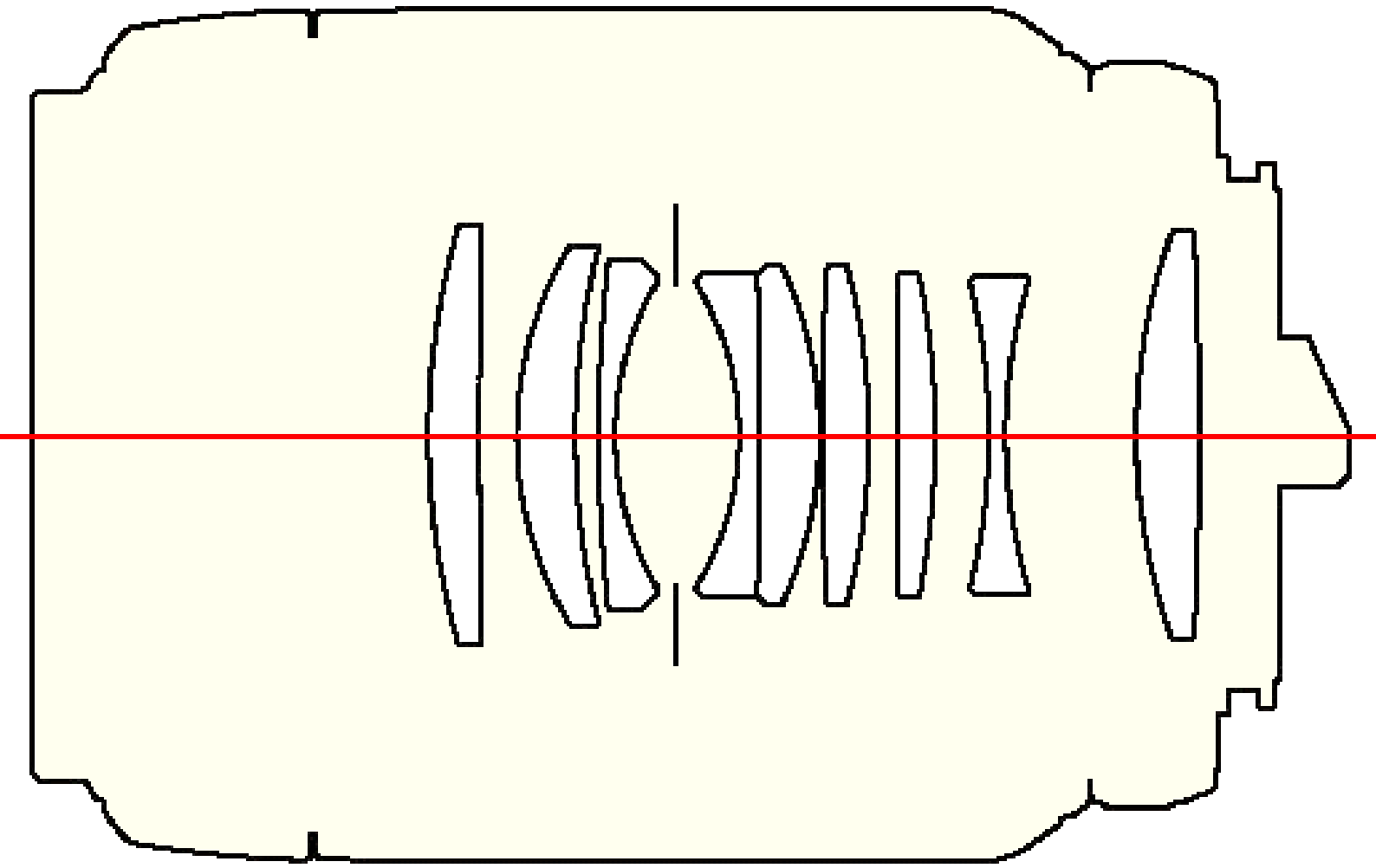

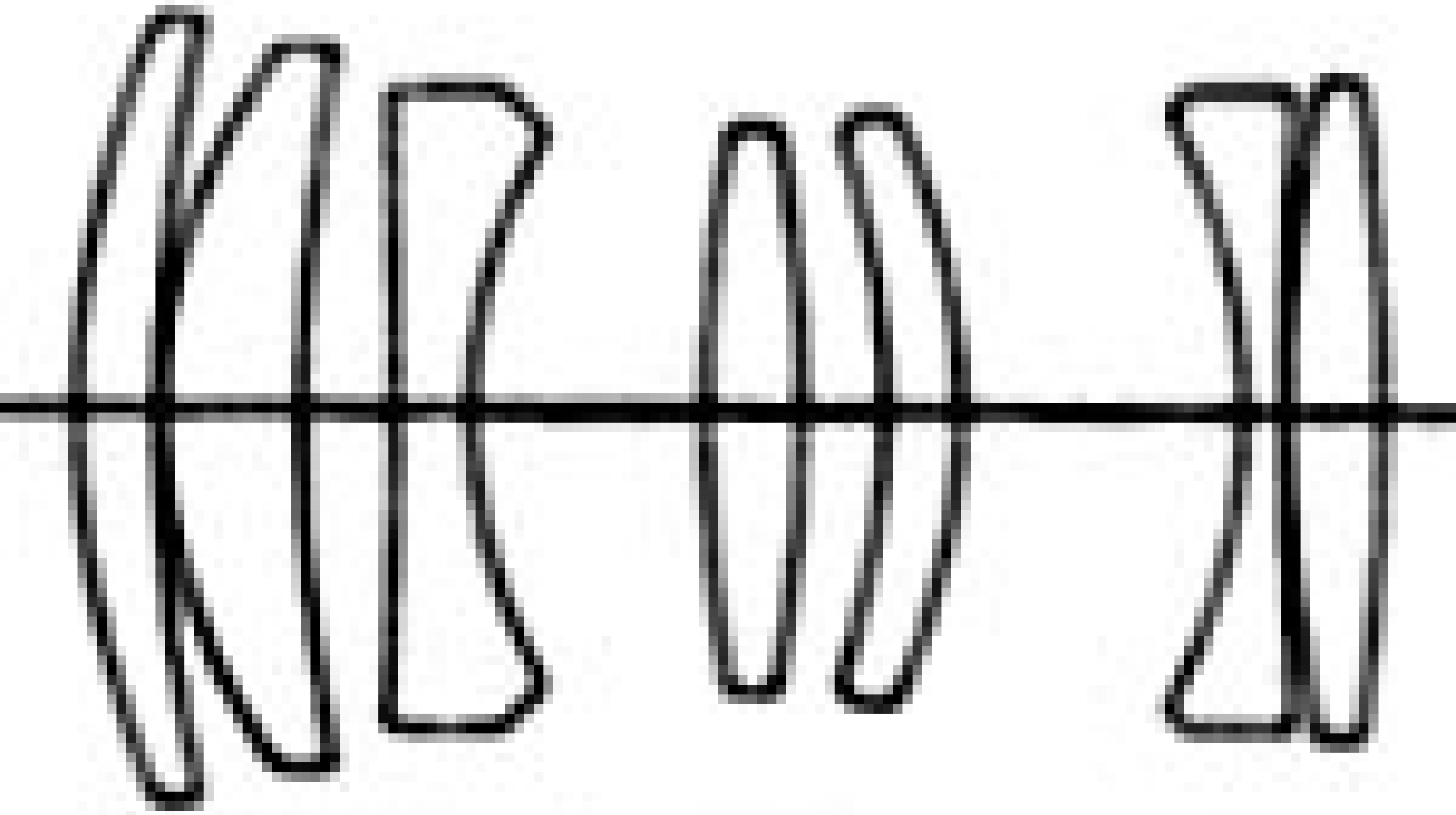

PENT

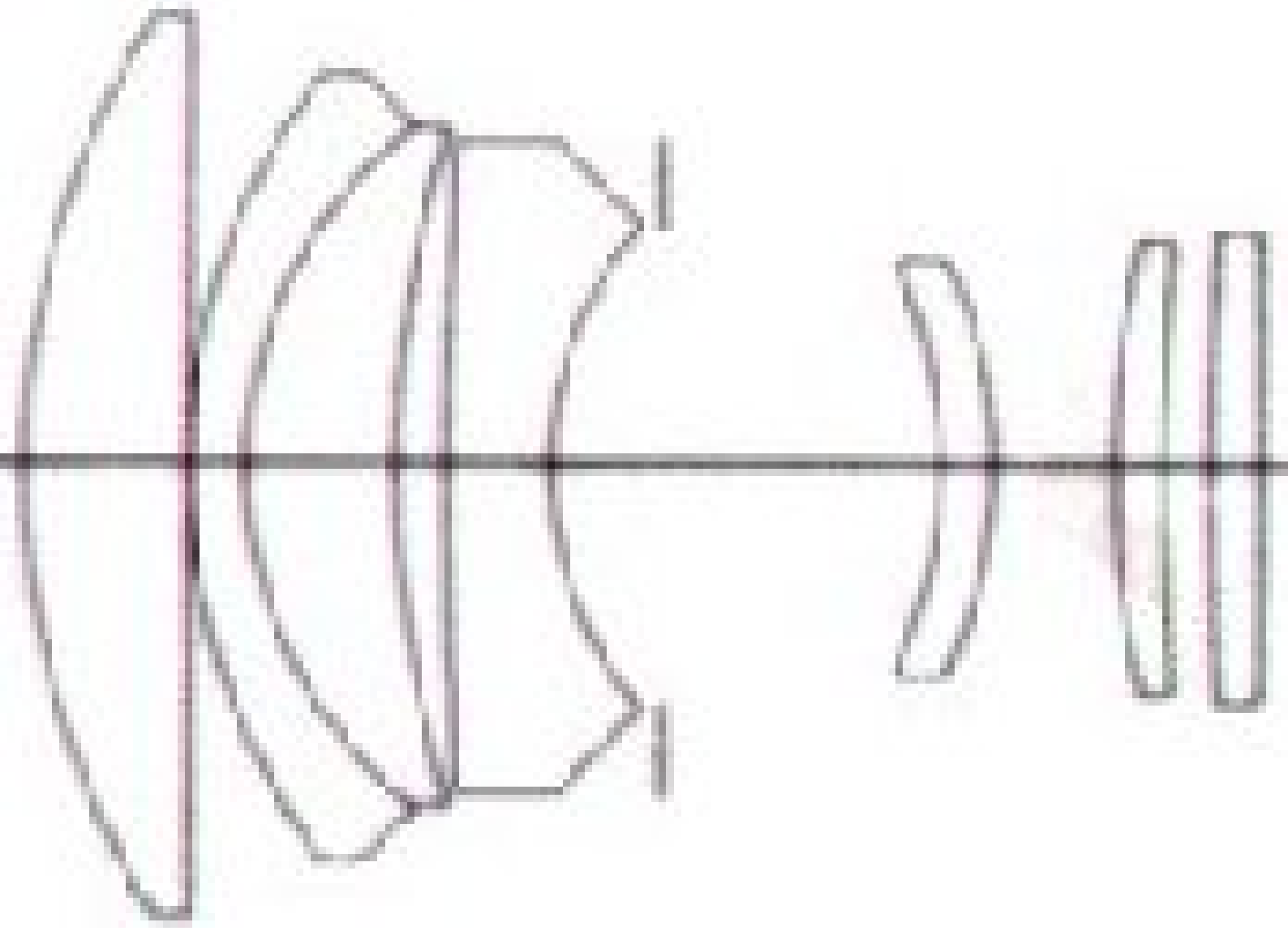

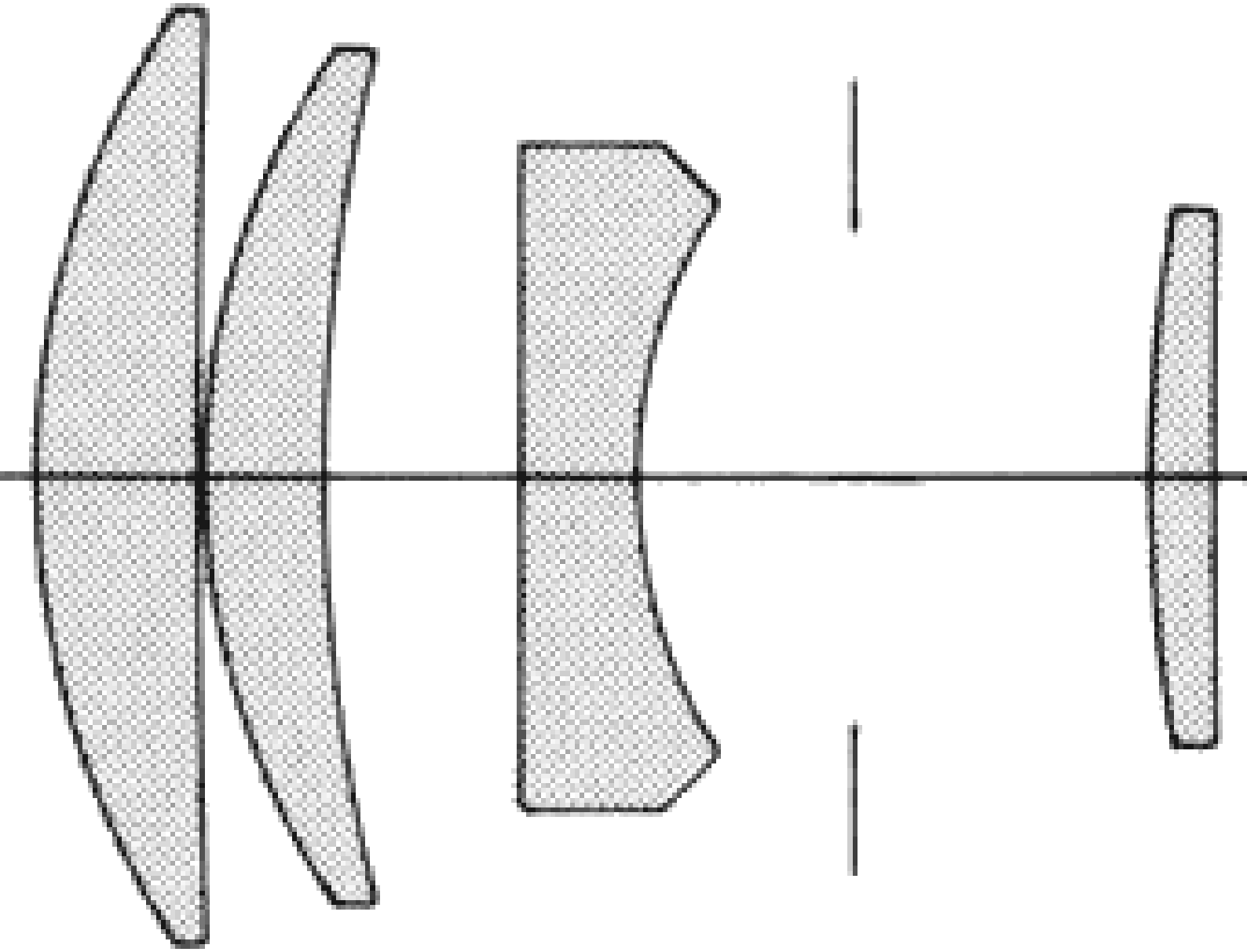

© Bojidar Dimitrov, 2002

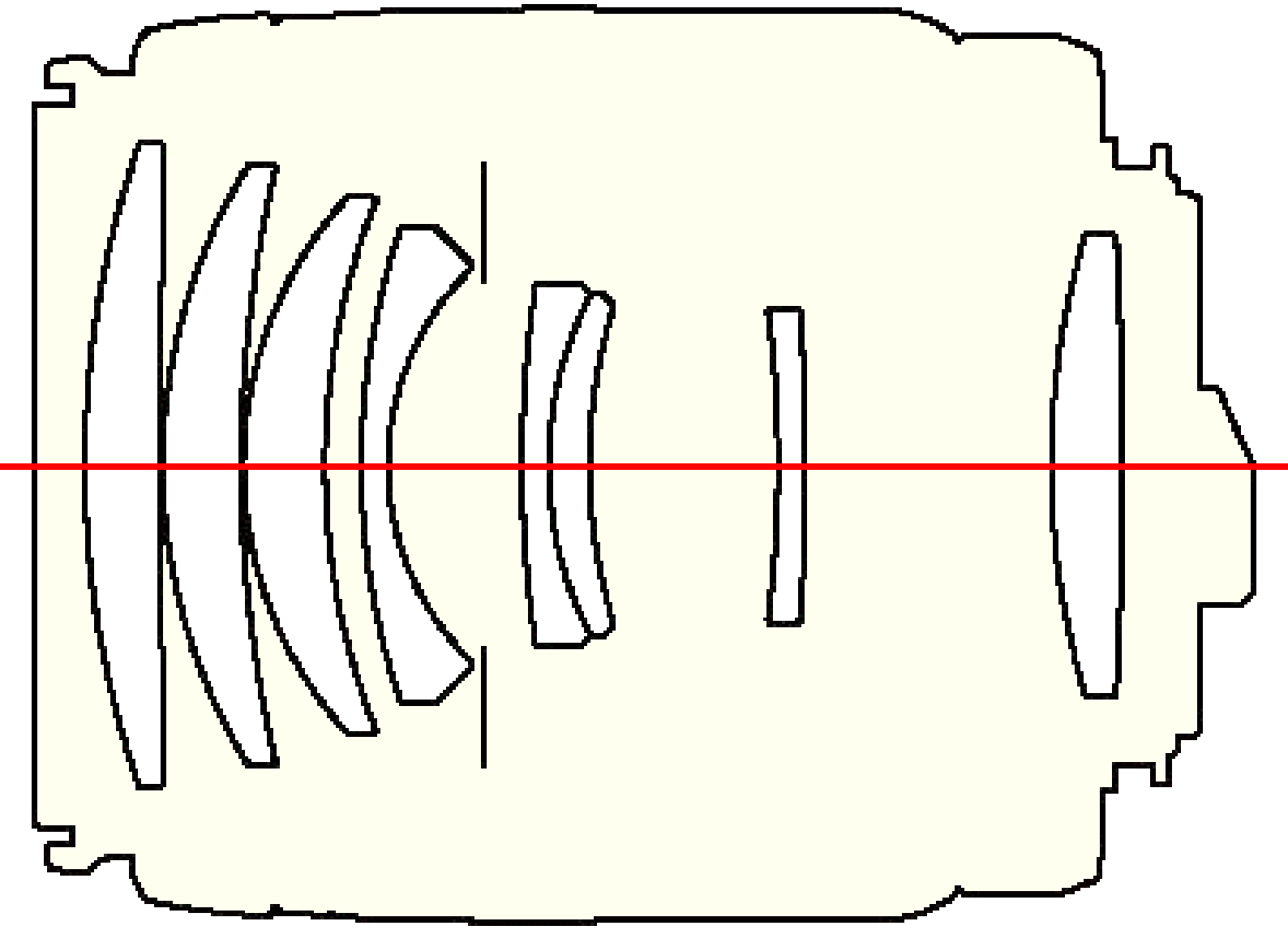

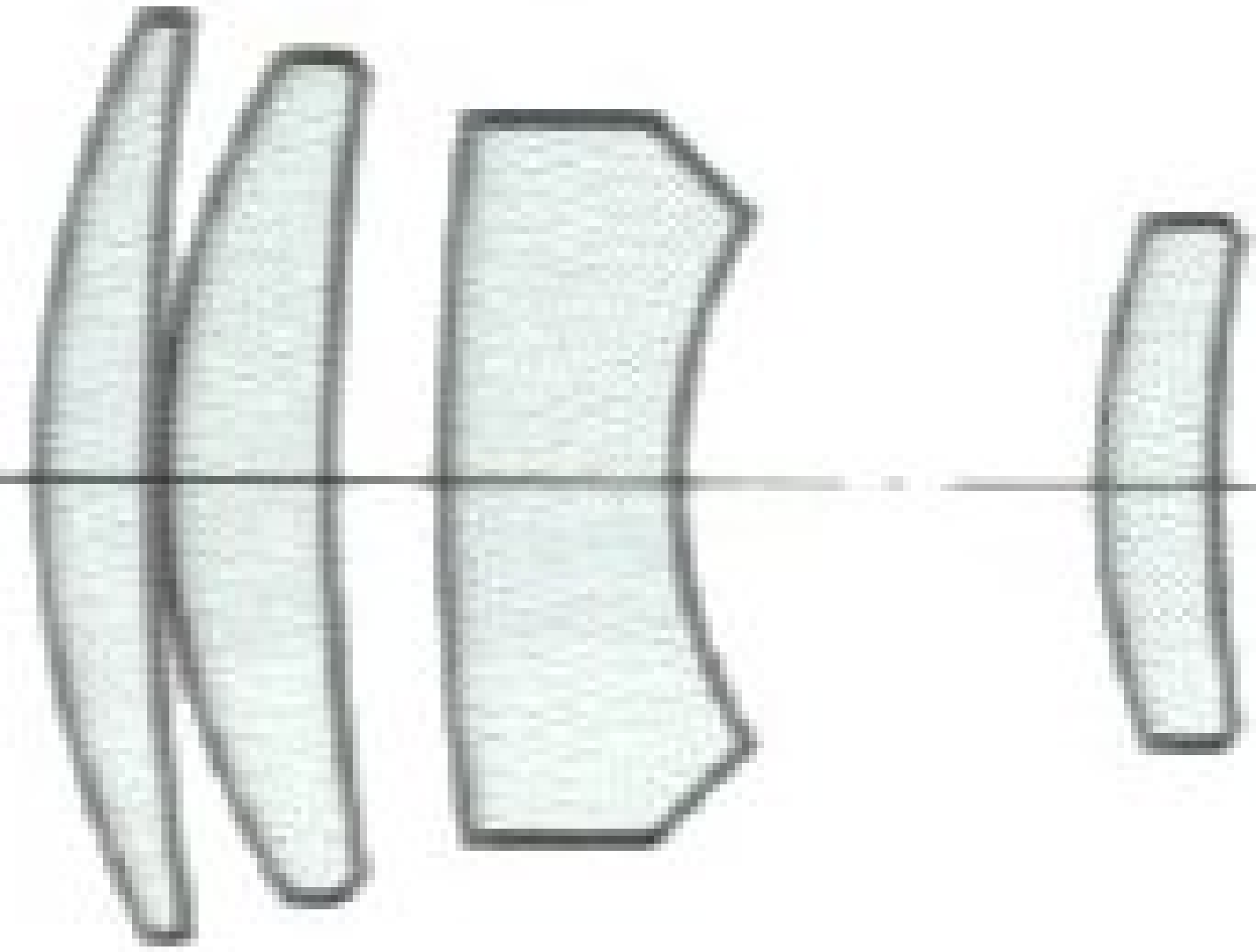

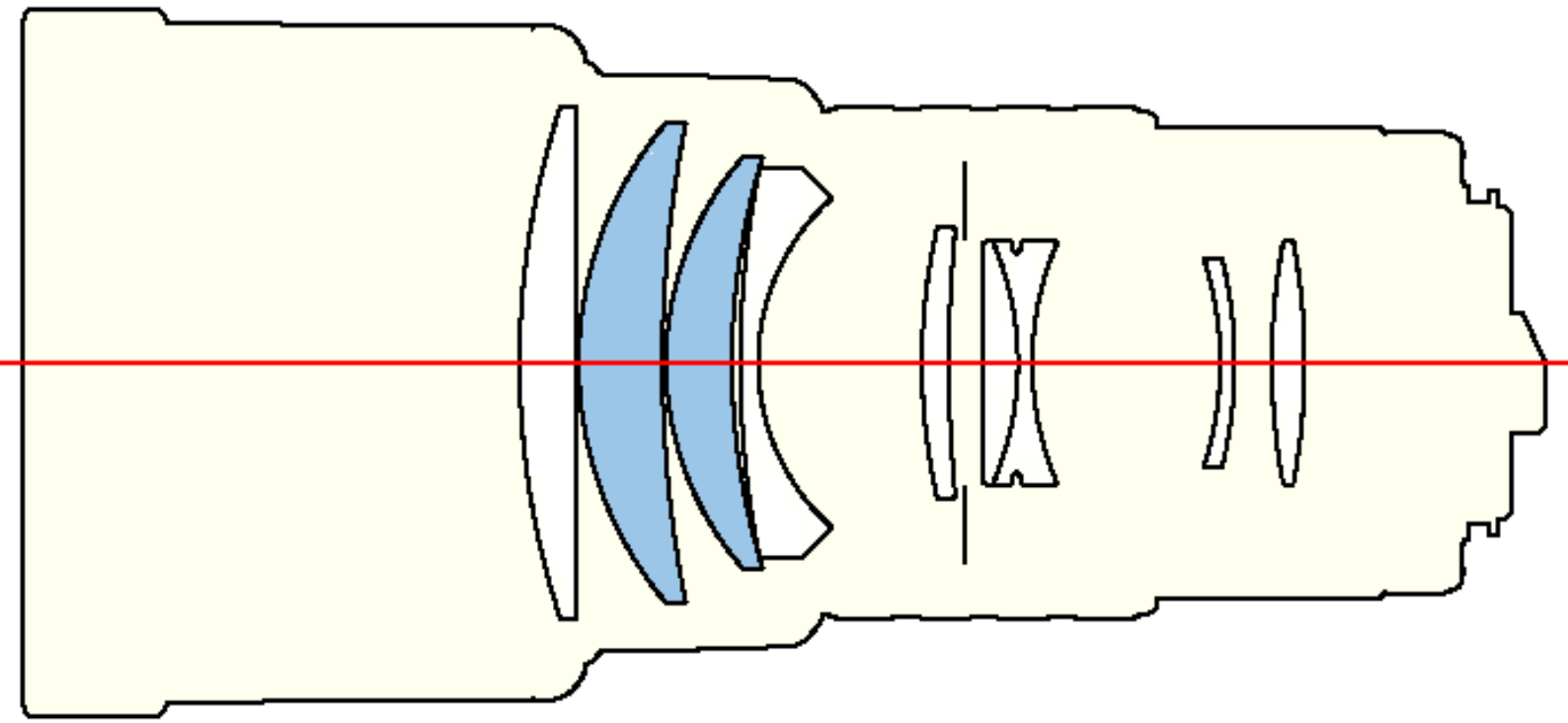

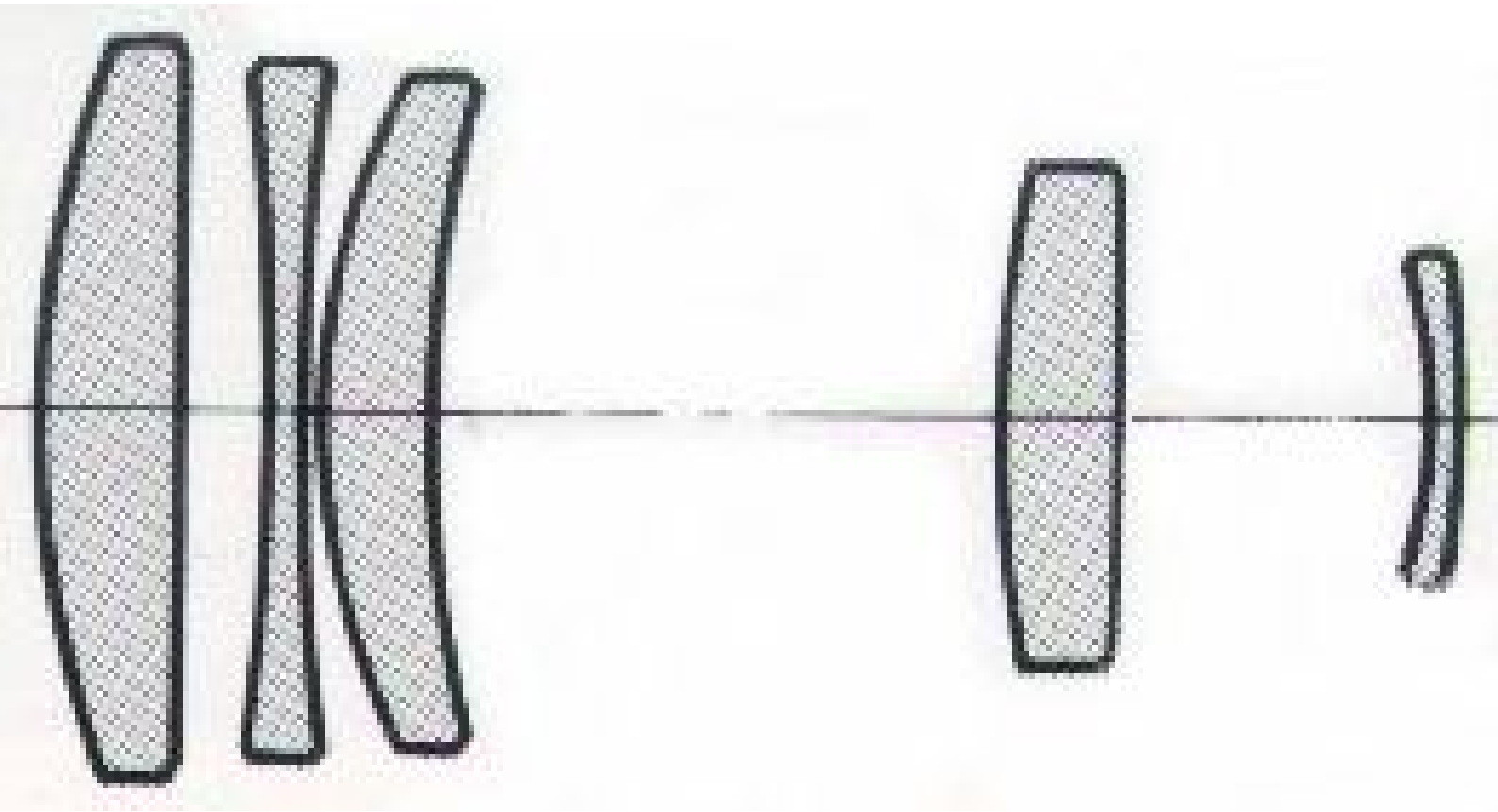

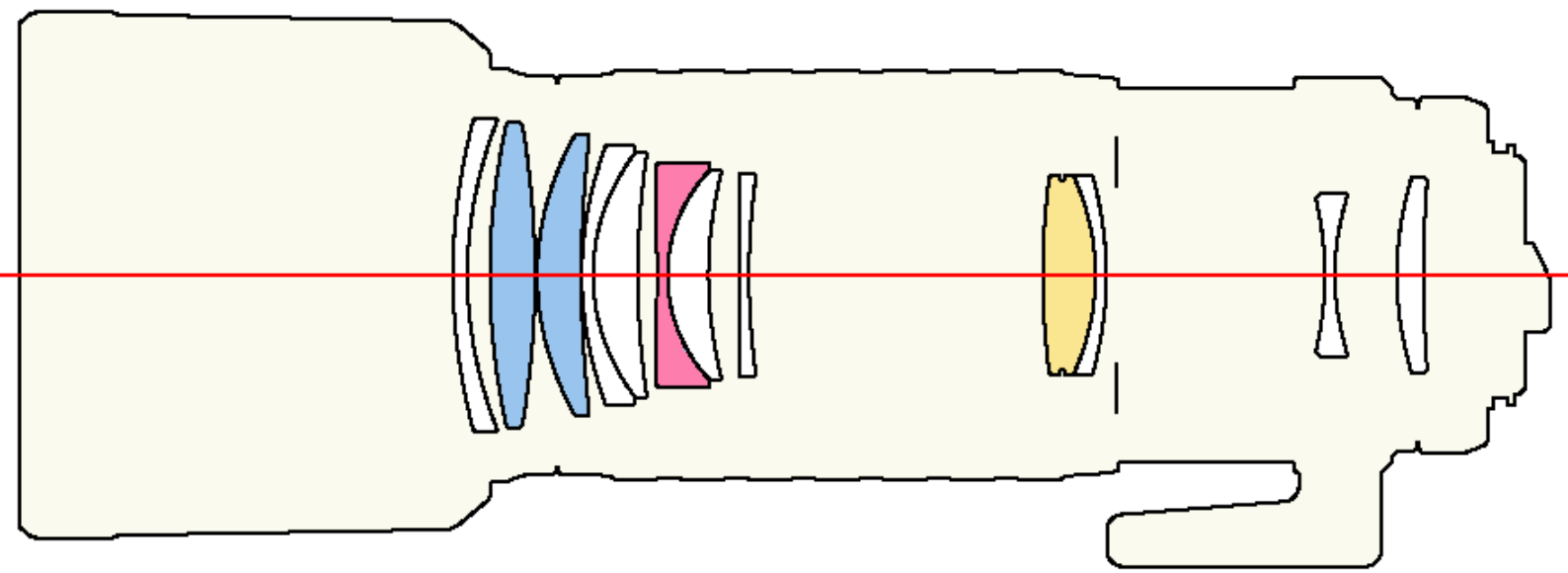

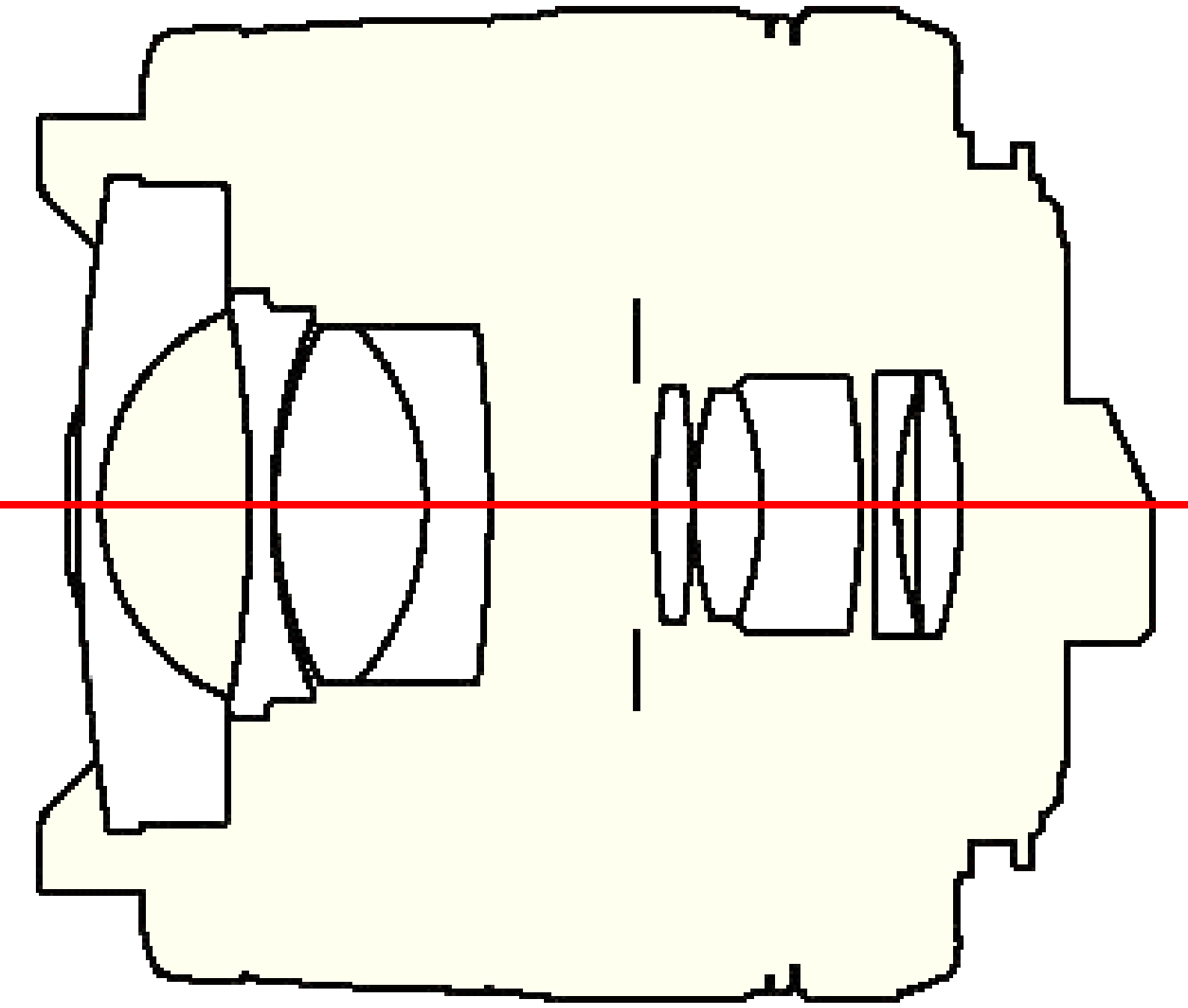

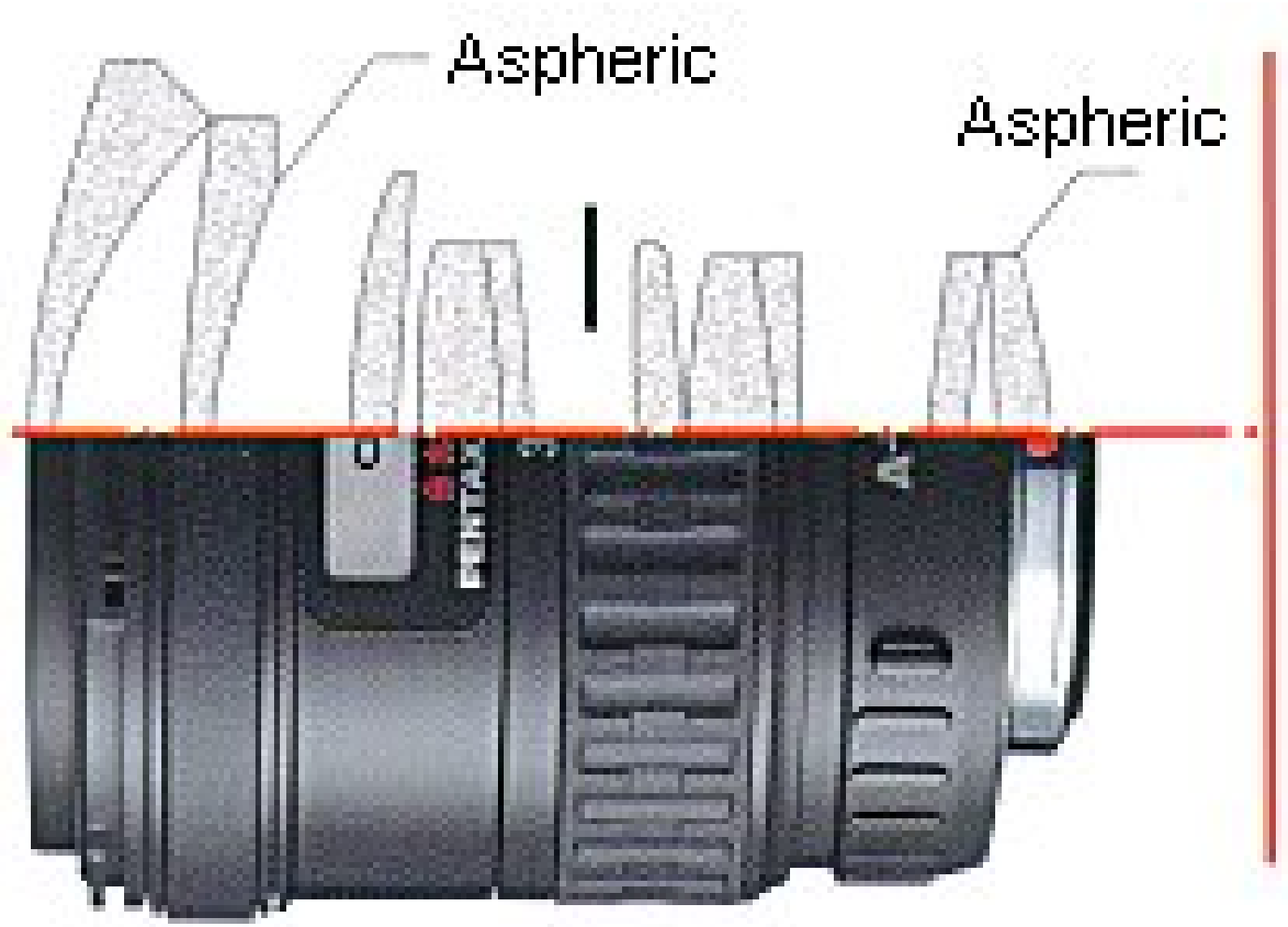
Aspheric
Aspheric

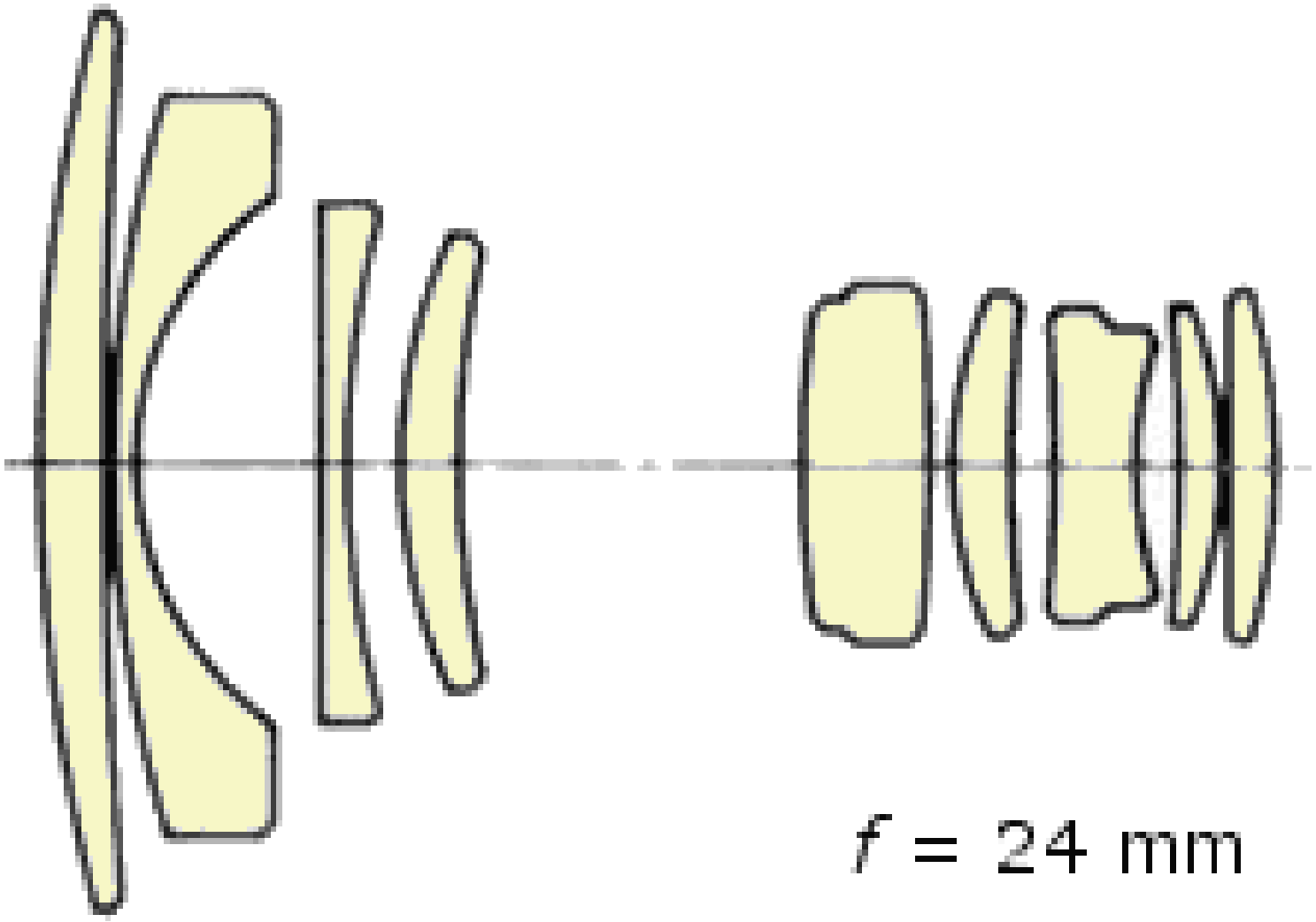
f = 24 mm

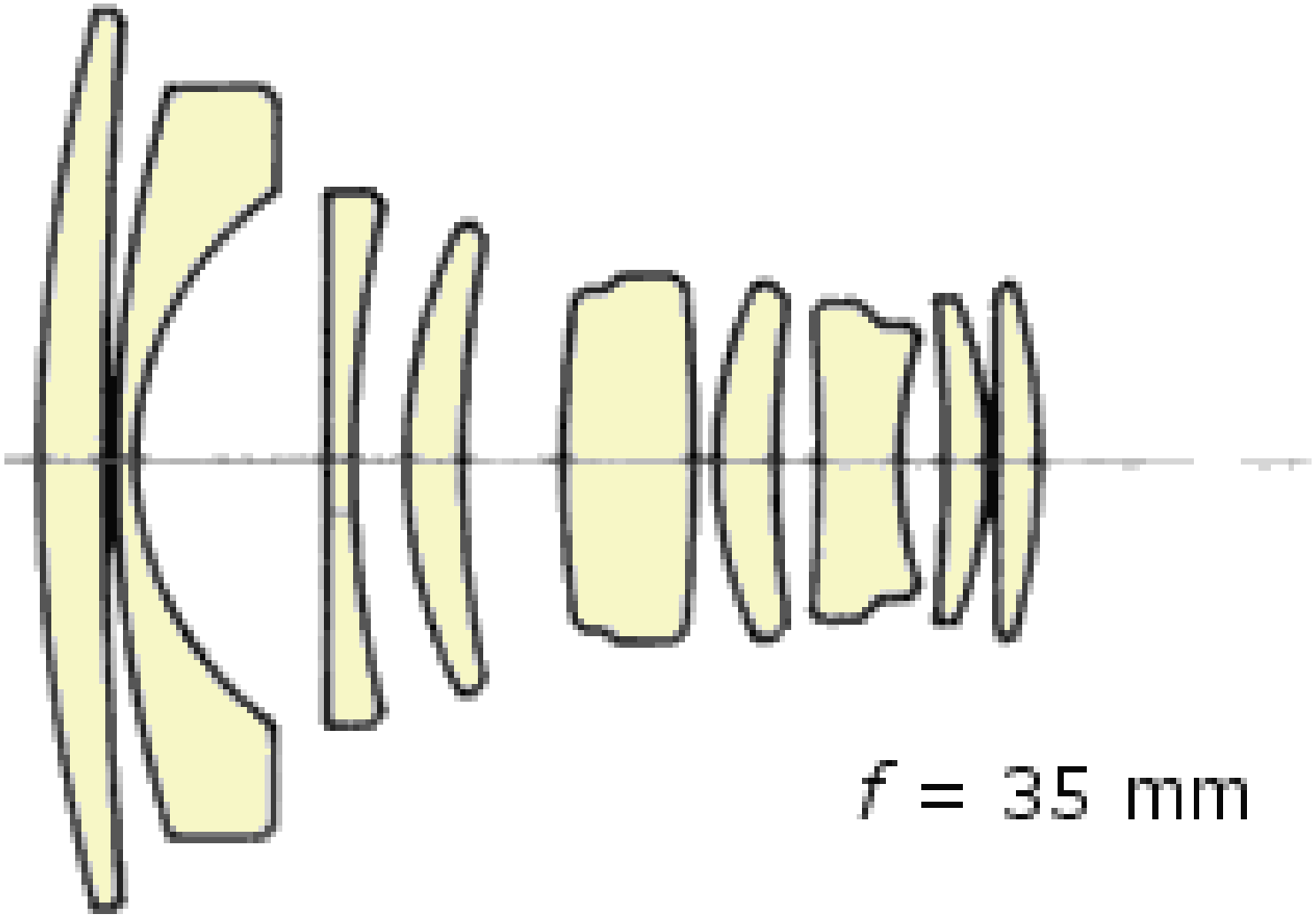
f = 35 mm

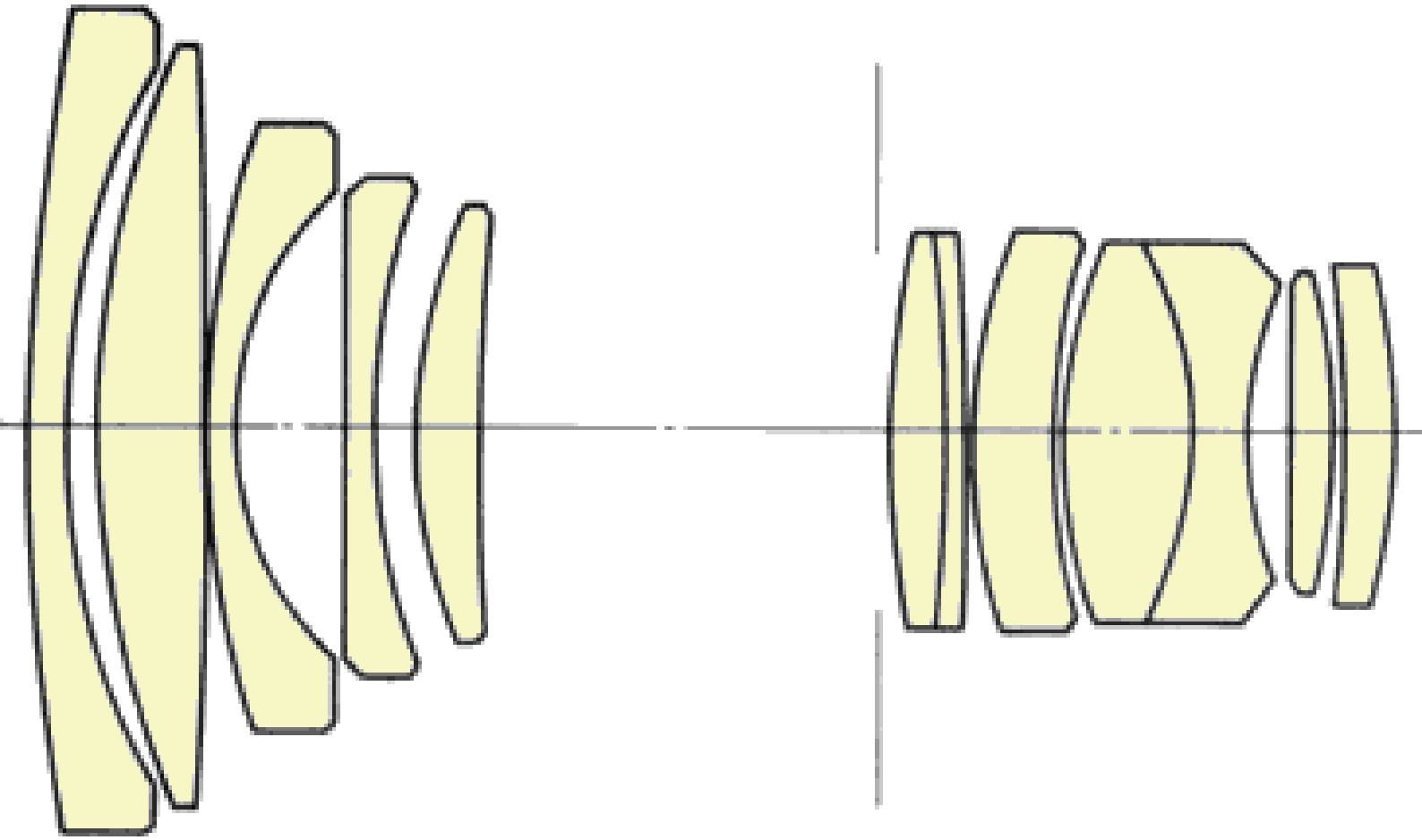

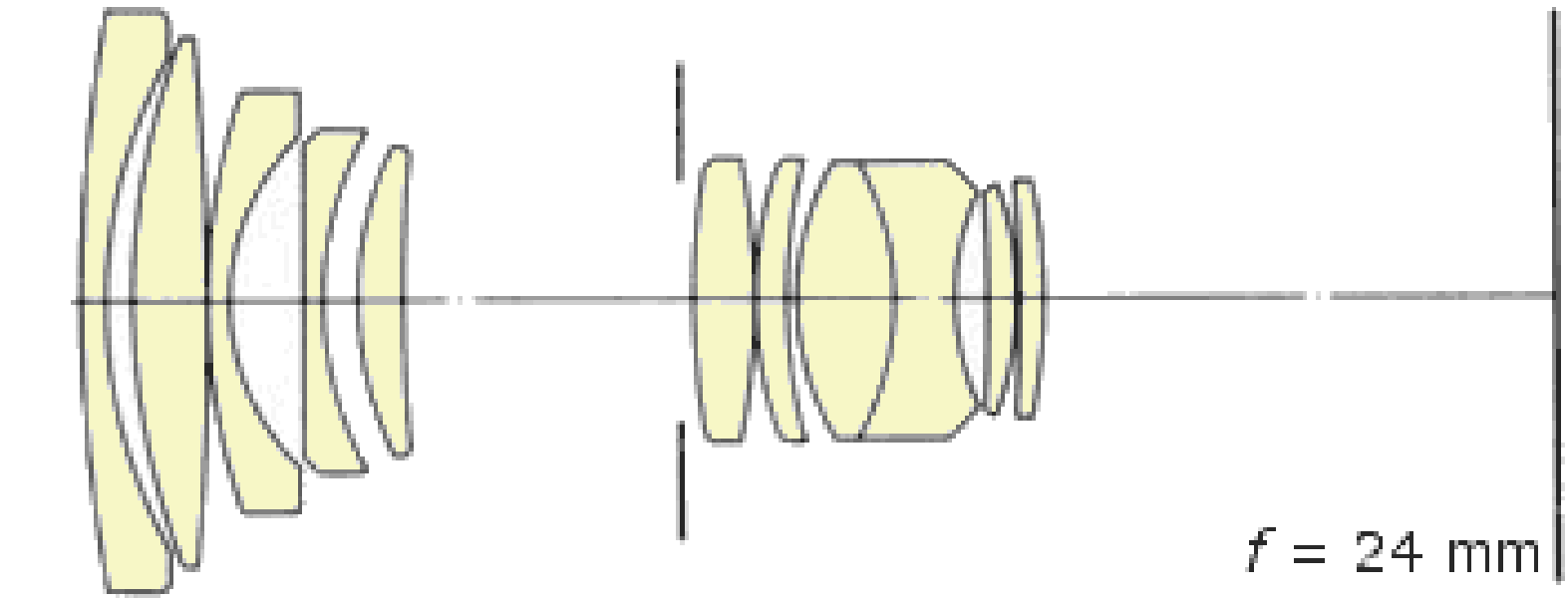
f = 24 mm

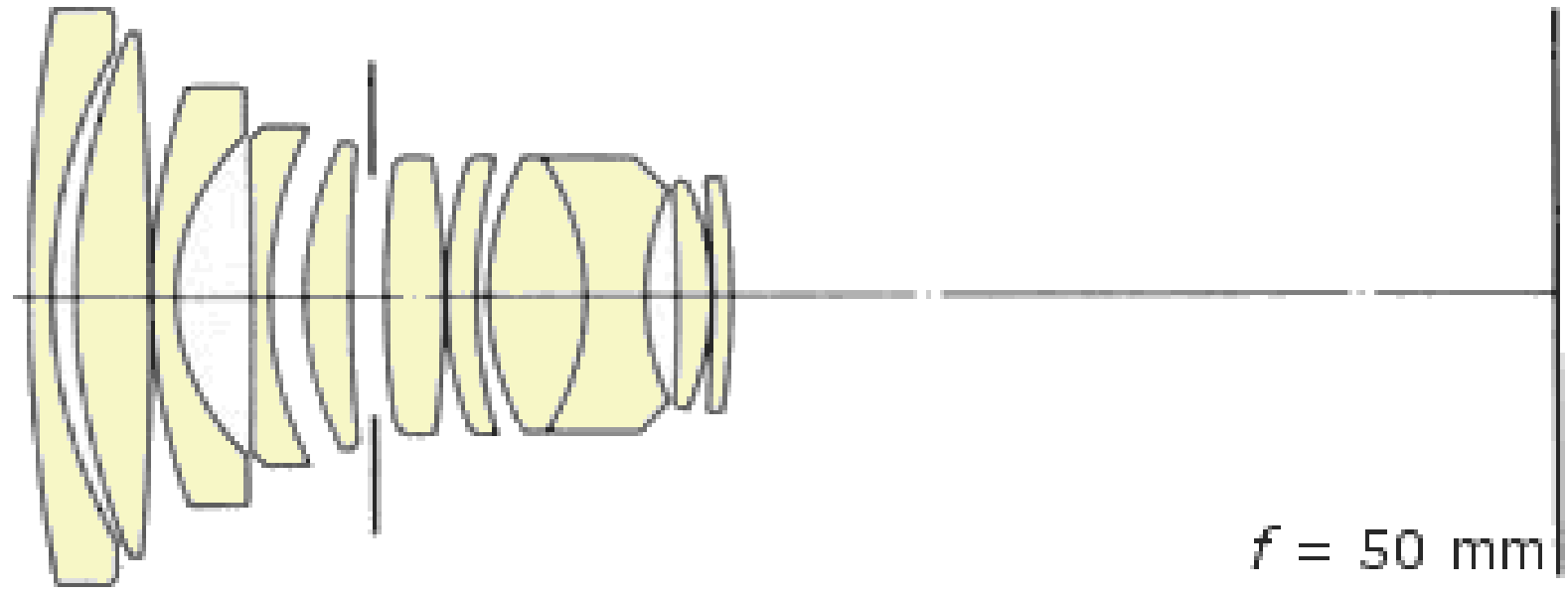
f = 50 mm

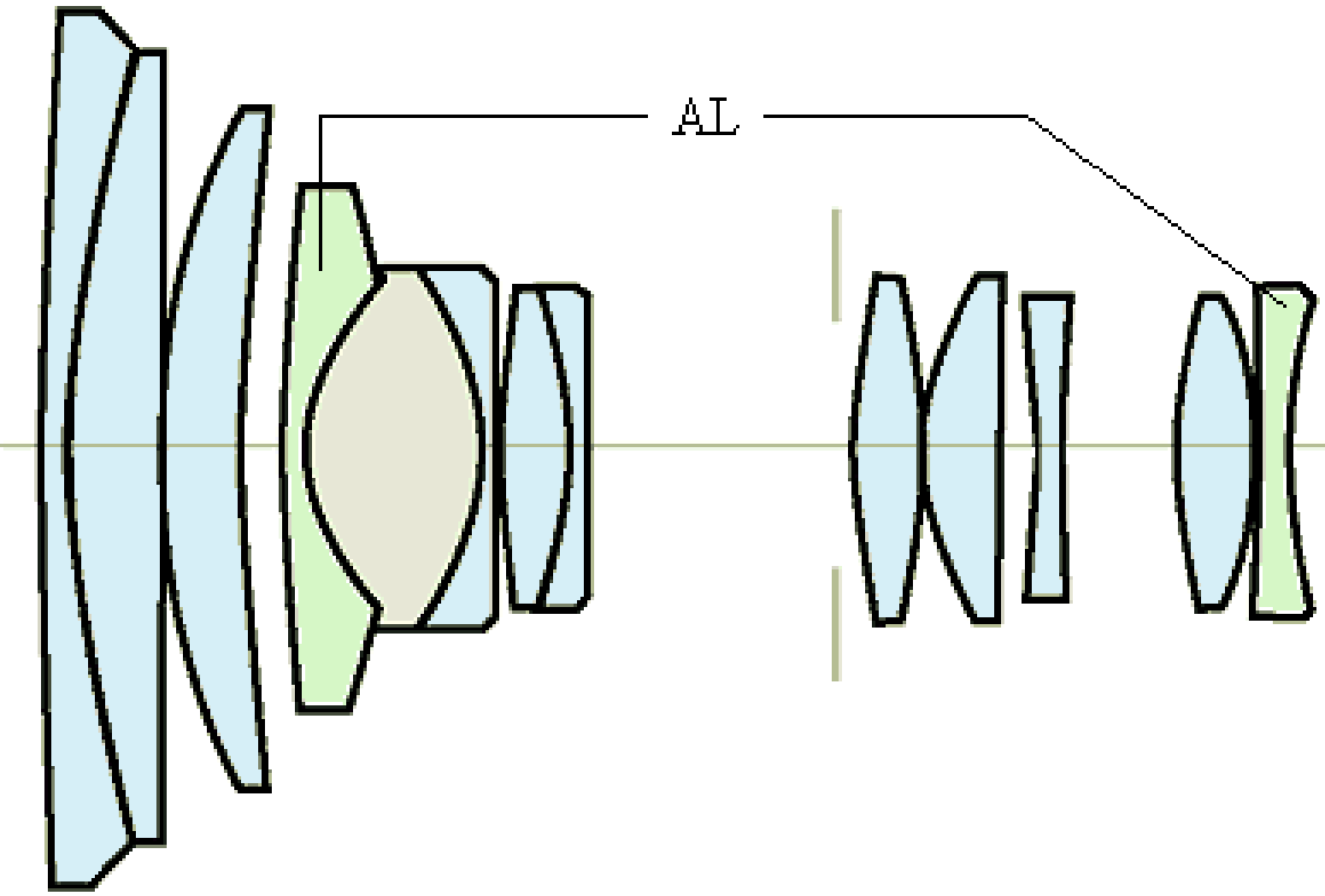
AL

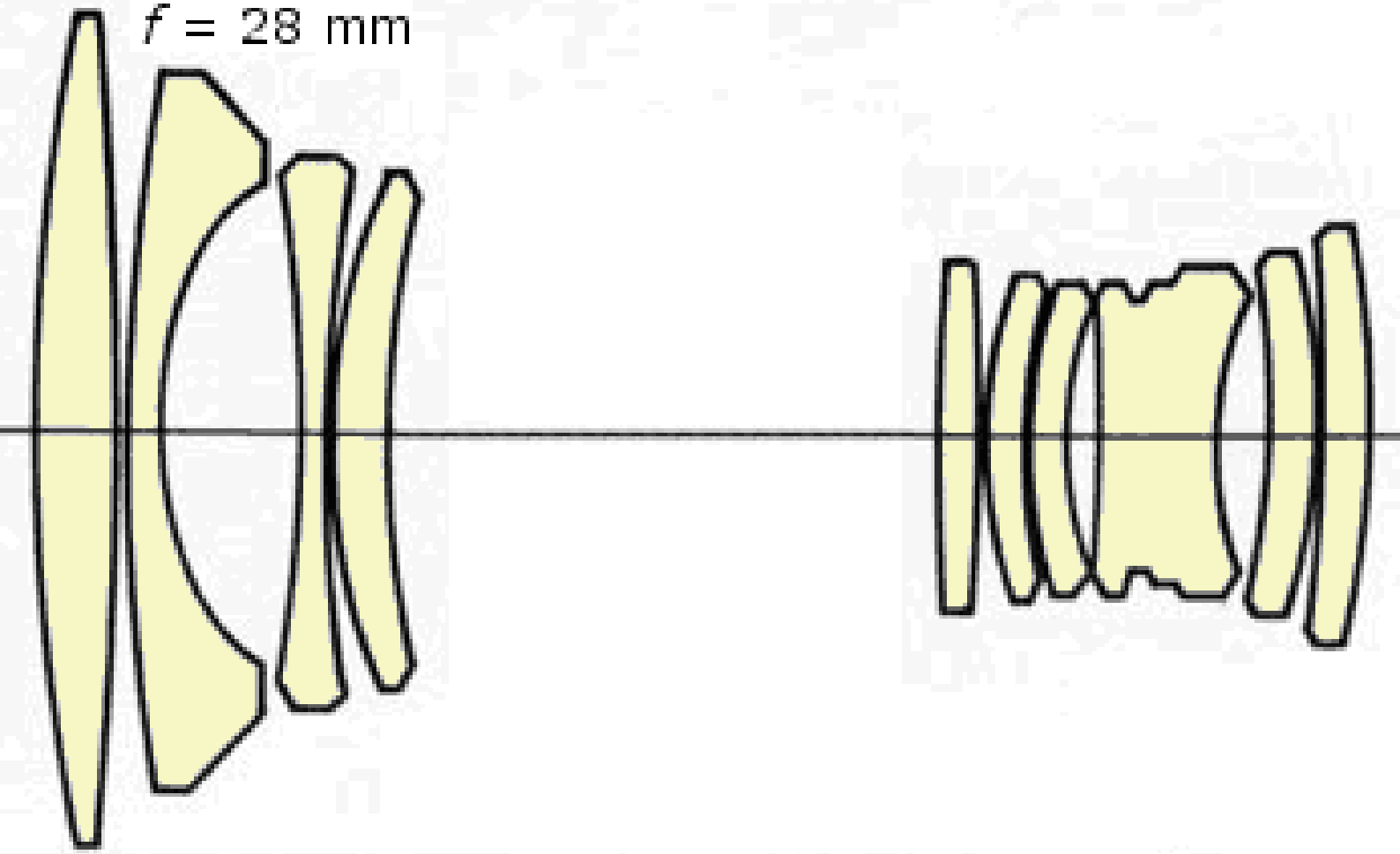
f = 28 mm

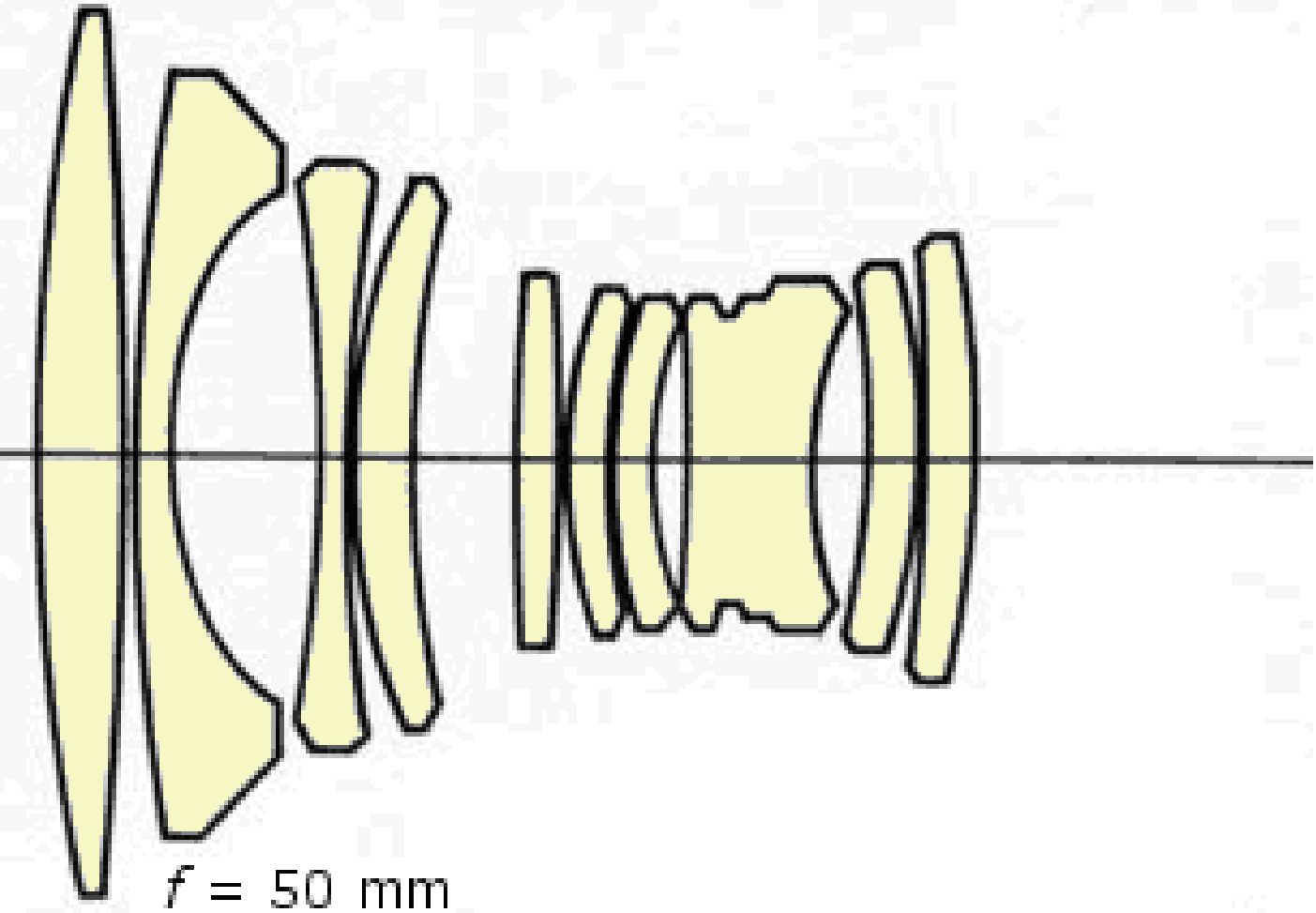
f = 50 mm

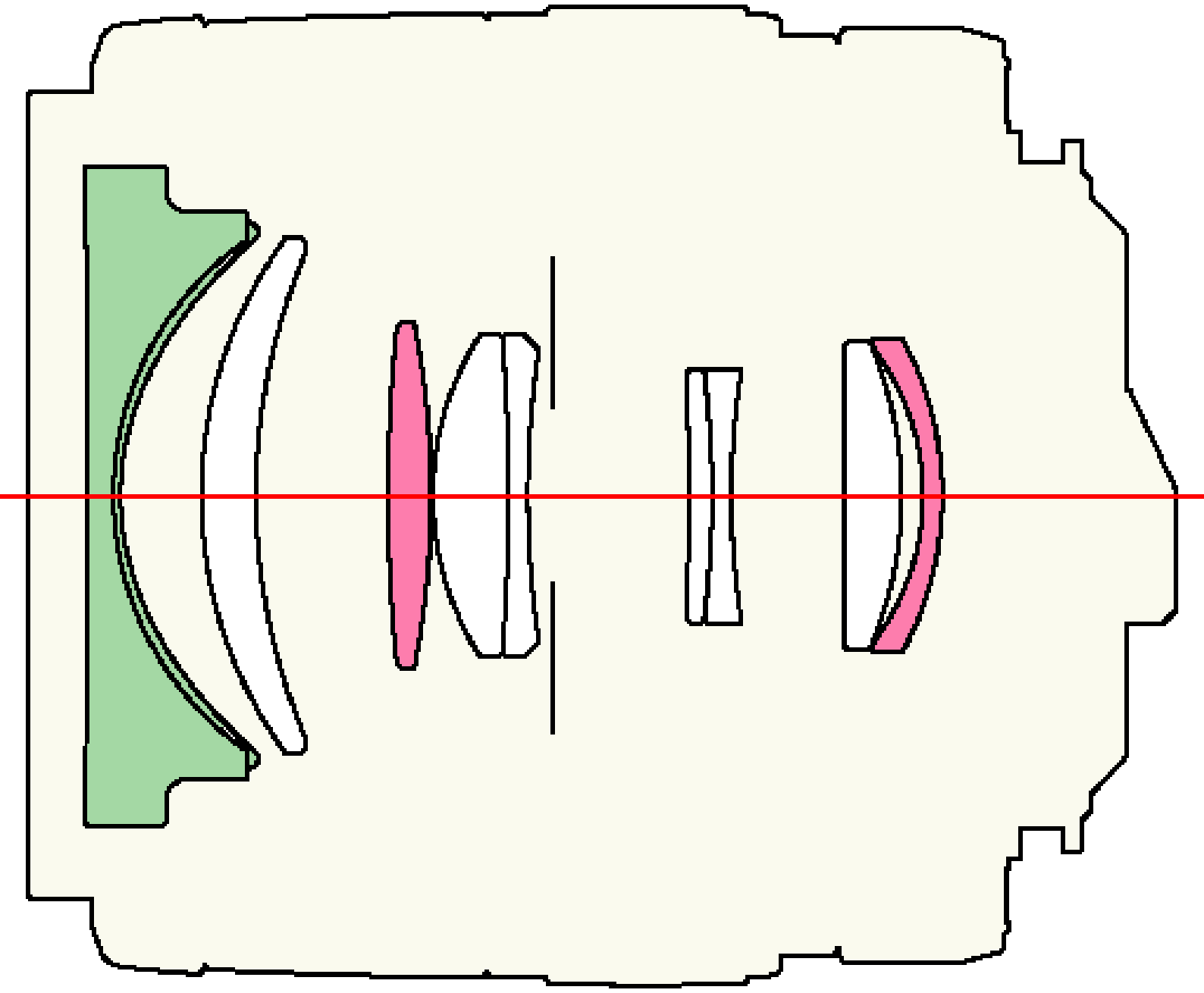

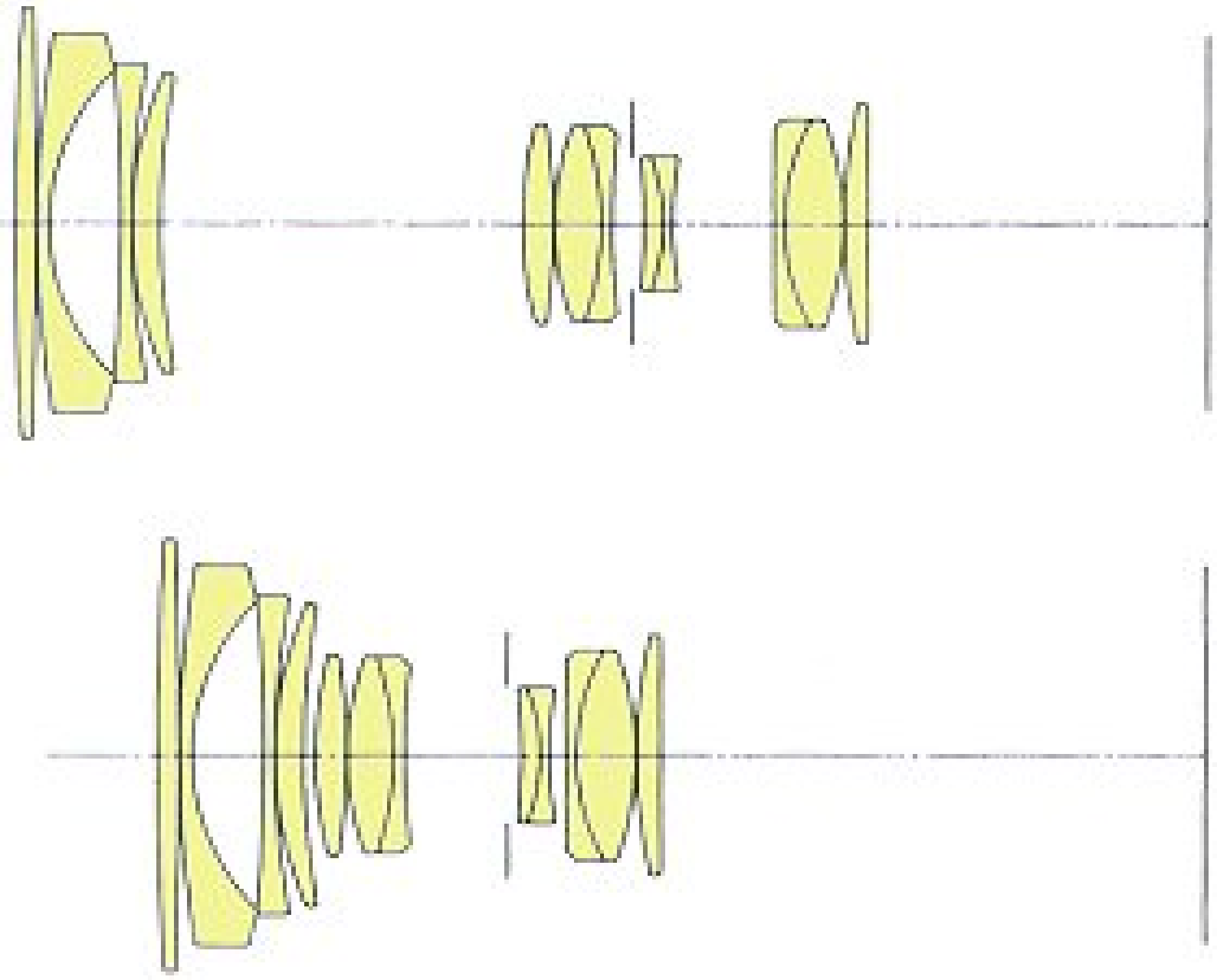

© Gary Murphy, 2003

PENTAX 28-105
A 22 16 11 8 5.6 3.2
PENTAX
© Bojidar Dimitrov, 2003

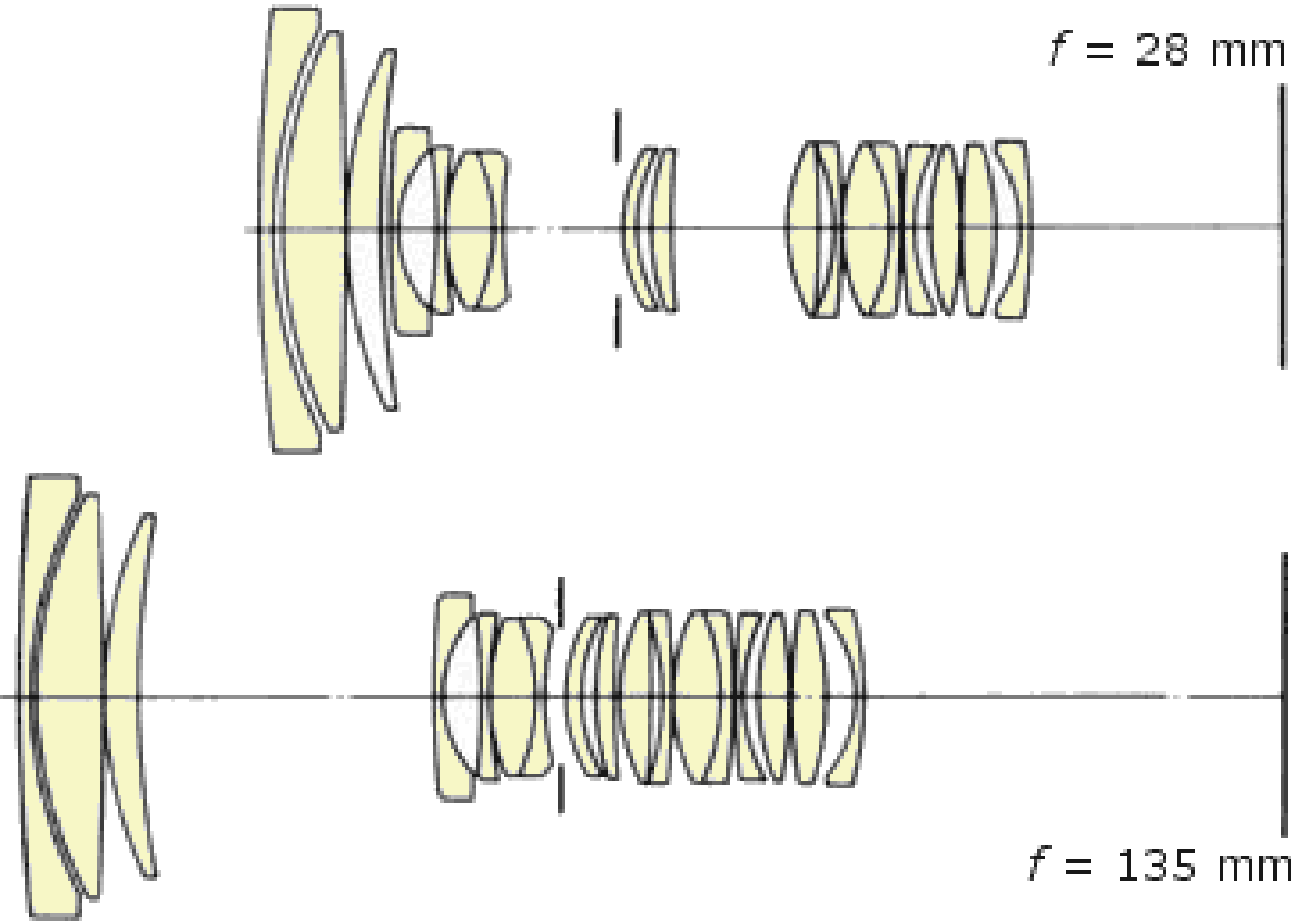
f = 28 mm
f = 135 mm

© Choi Chang-Woon, 2003

© Bojidar Dimitrov, 2003

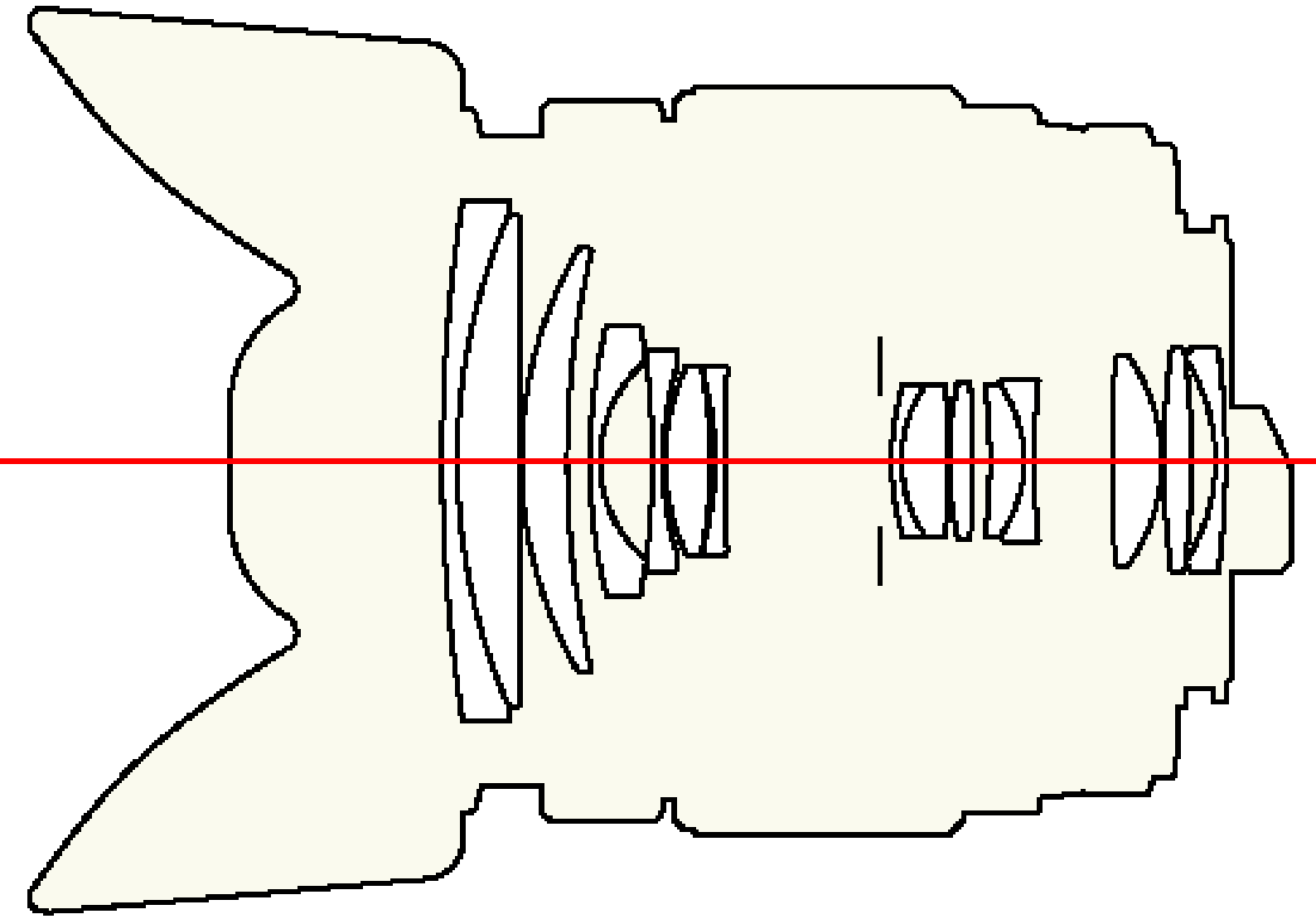

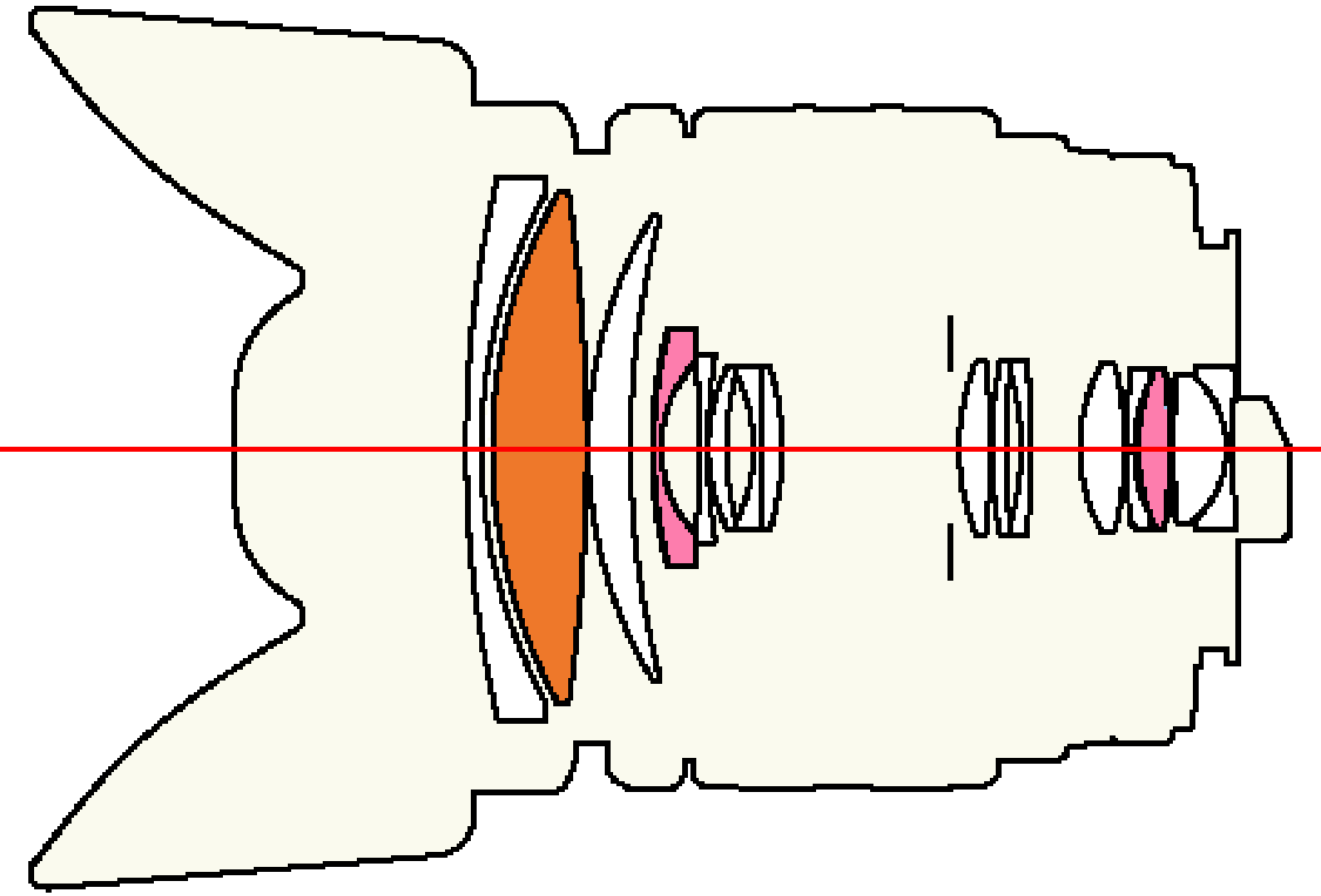

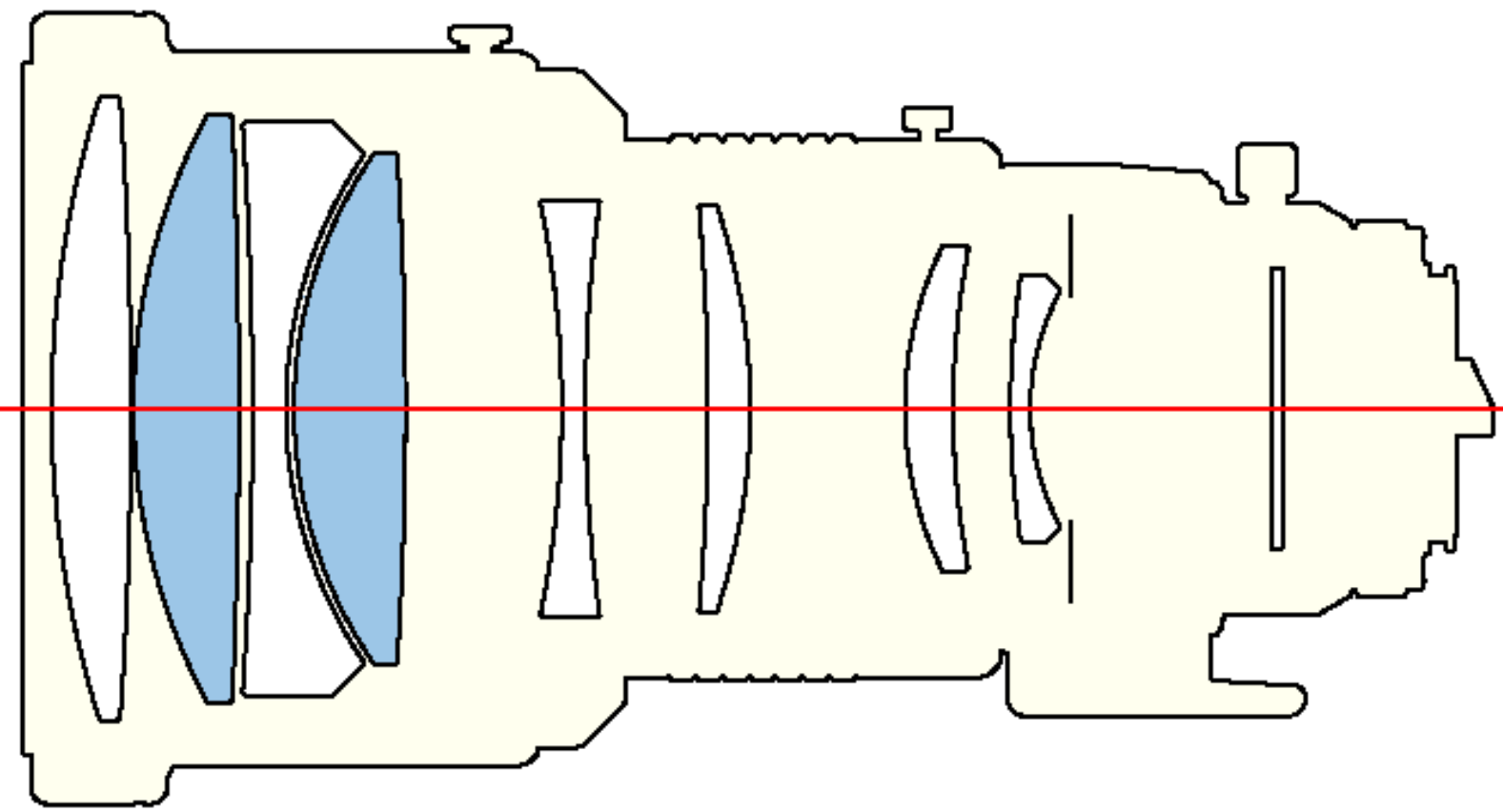

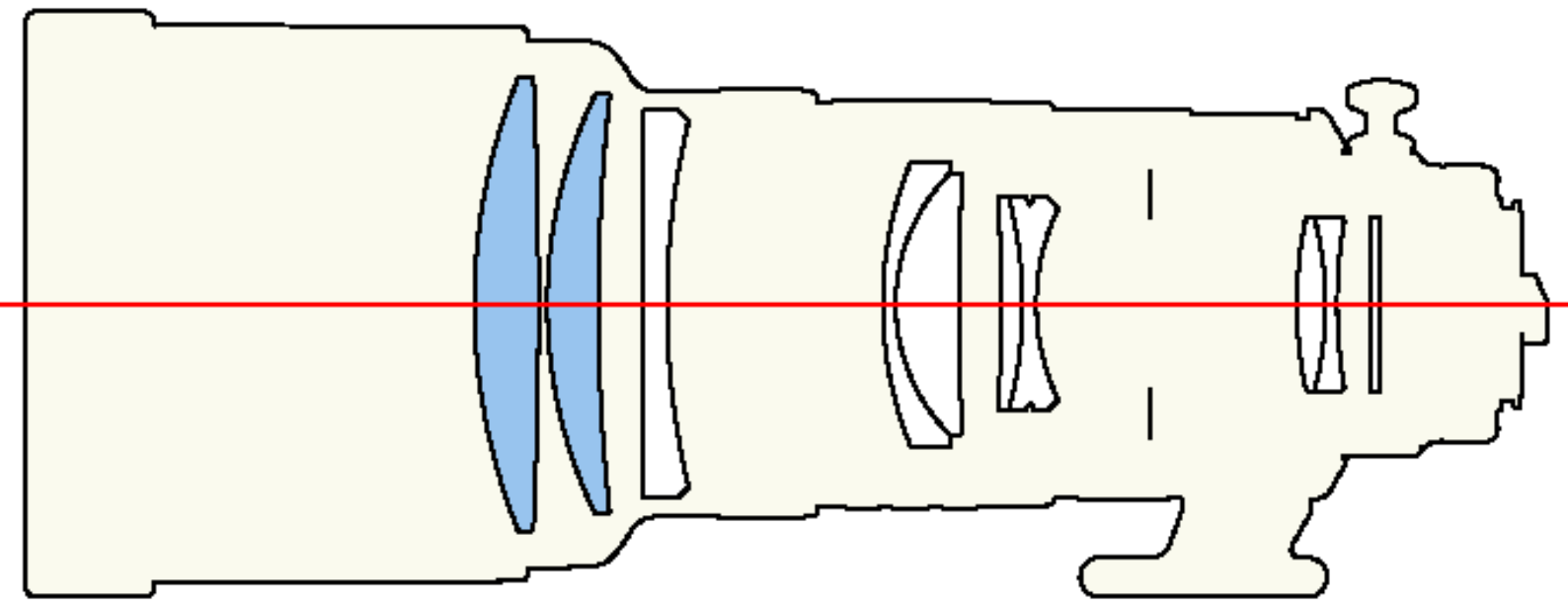

PENTAX 28-200
PENTAX 28-200
© Bojidar Dimitrov, 2003

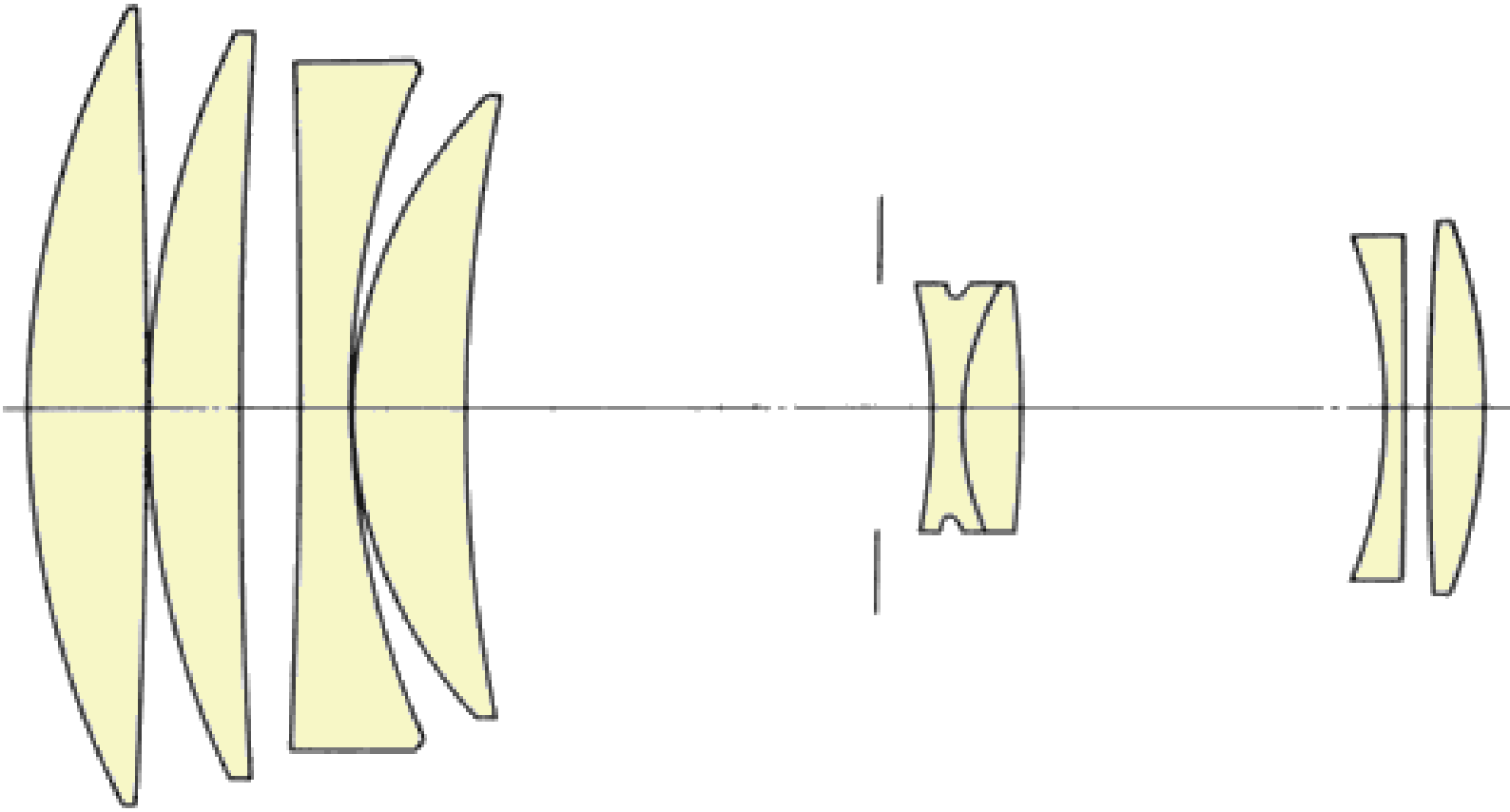

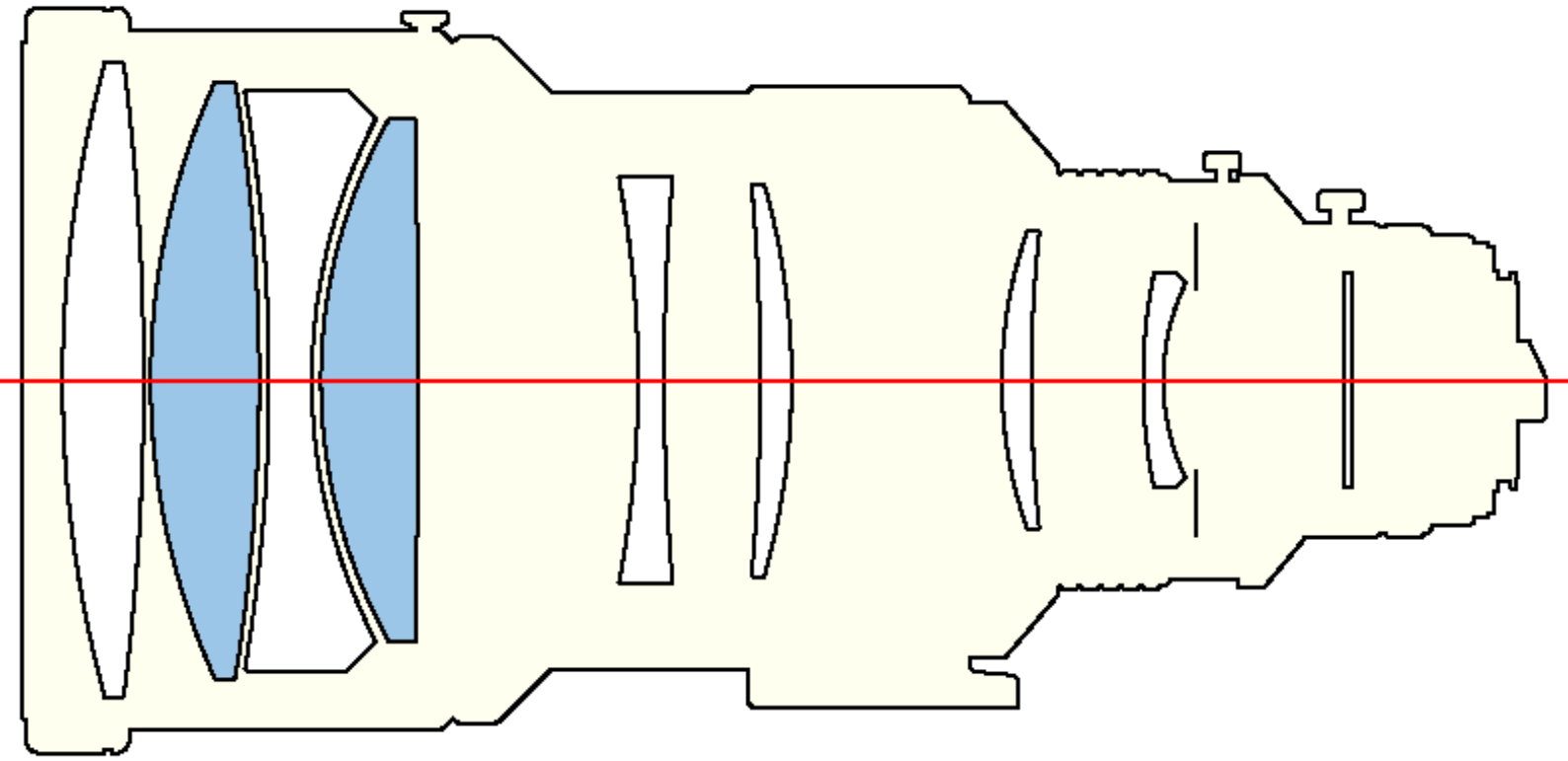

PENTAX

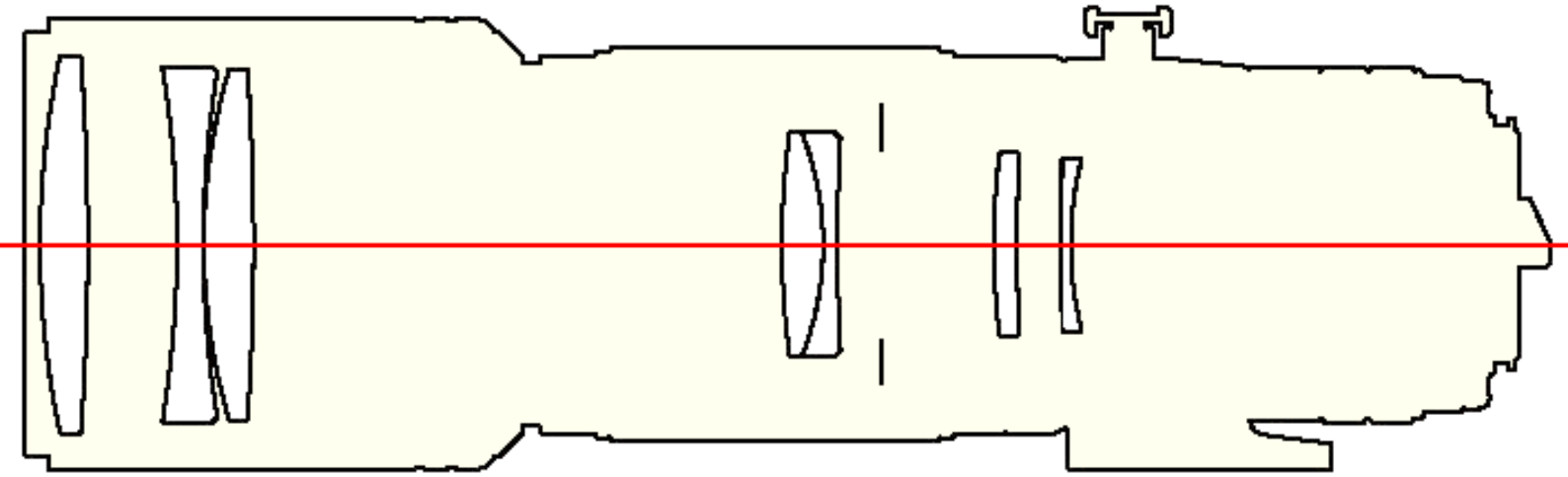

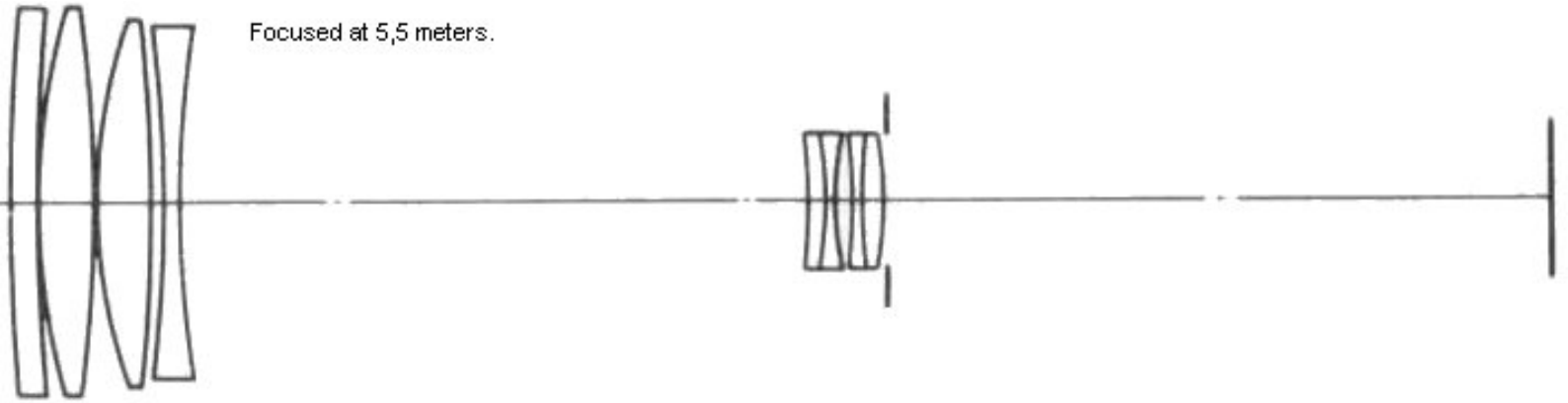
Focused at 5,5 meters.

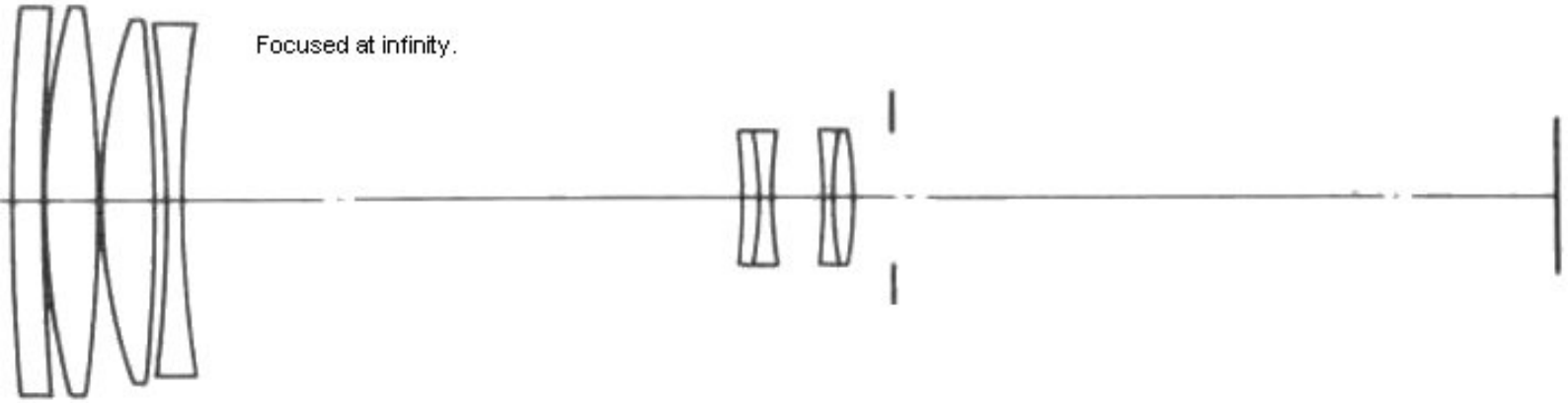
Focused at infinity.

color
filter
mirror
ND
filter
mirror

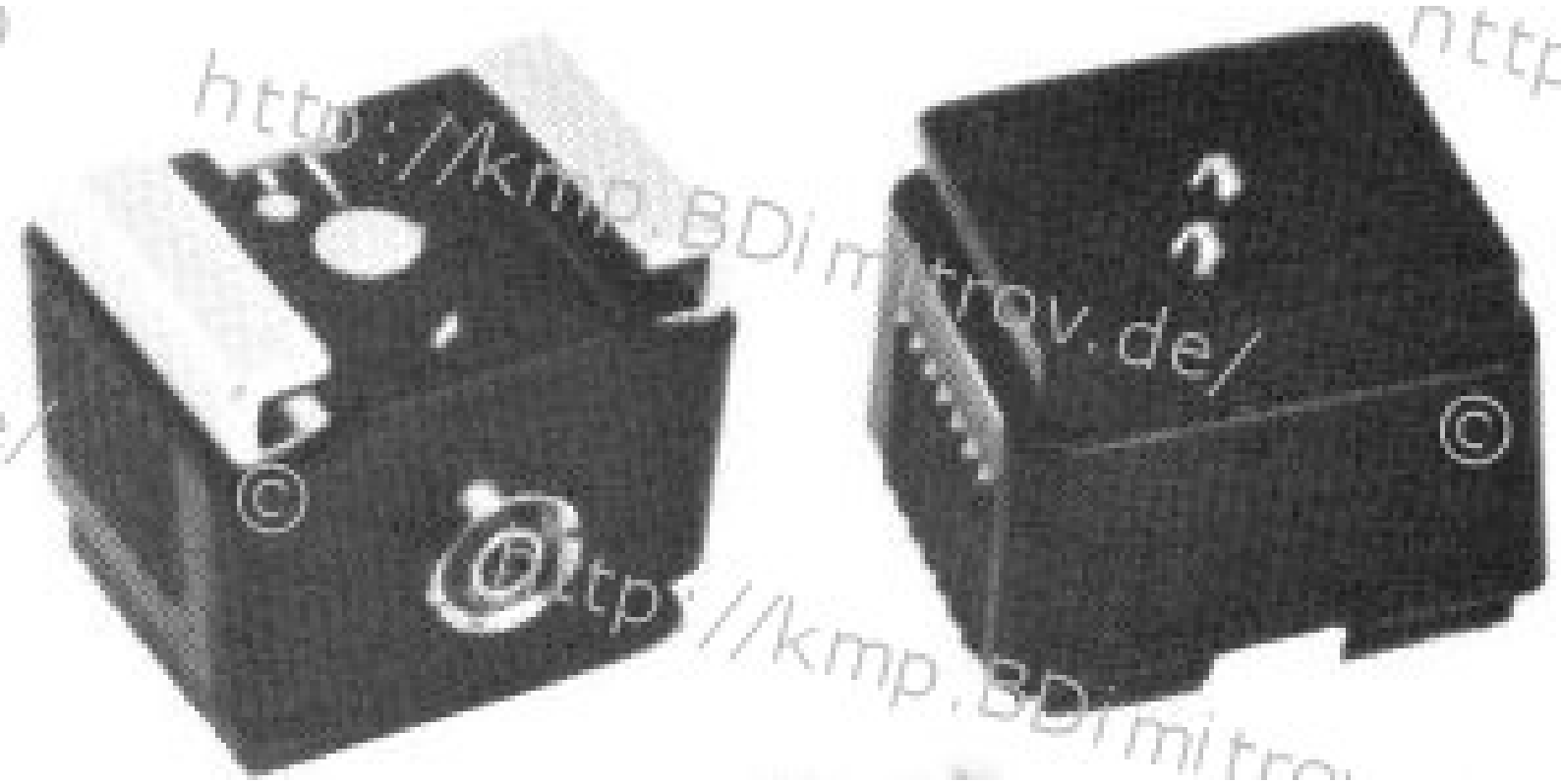

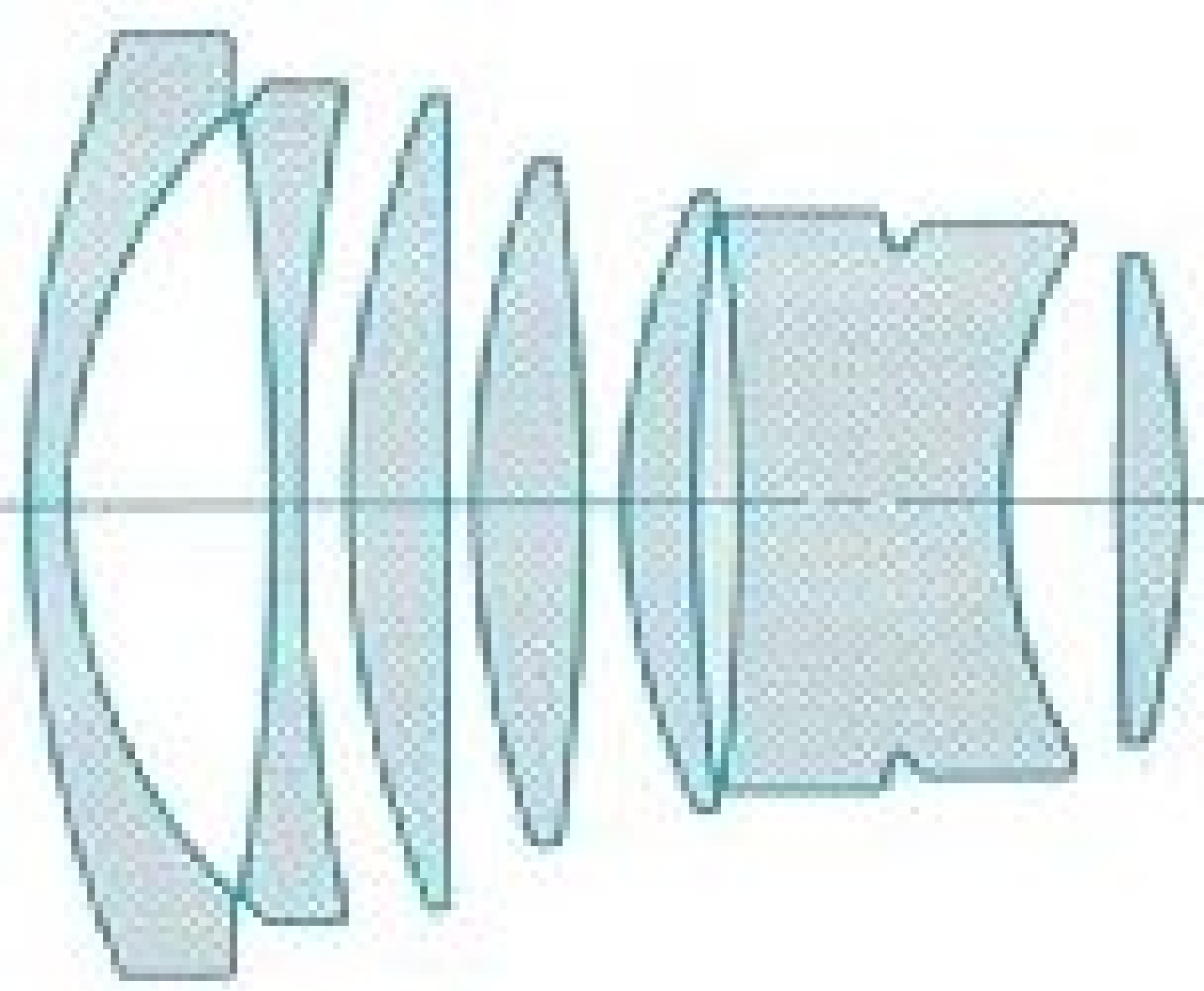

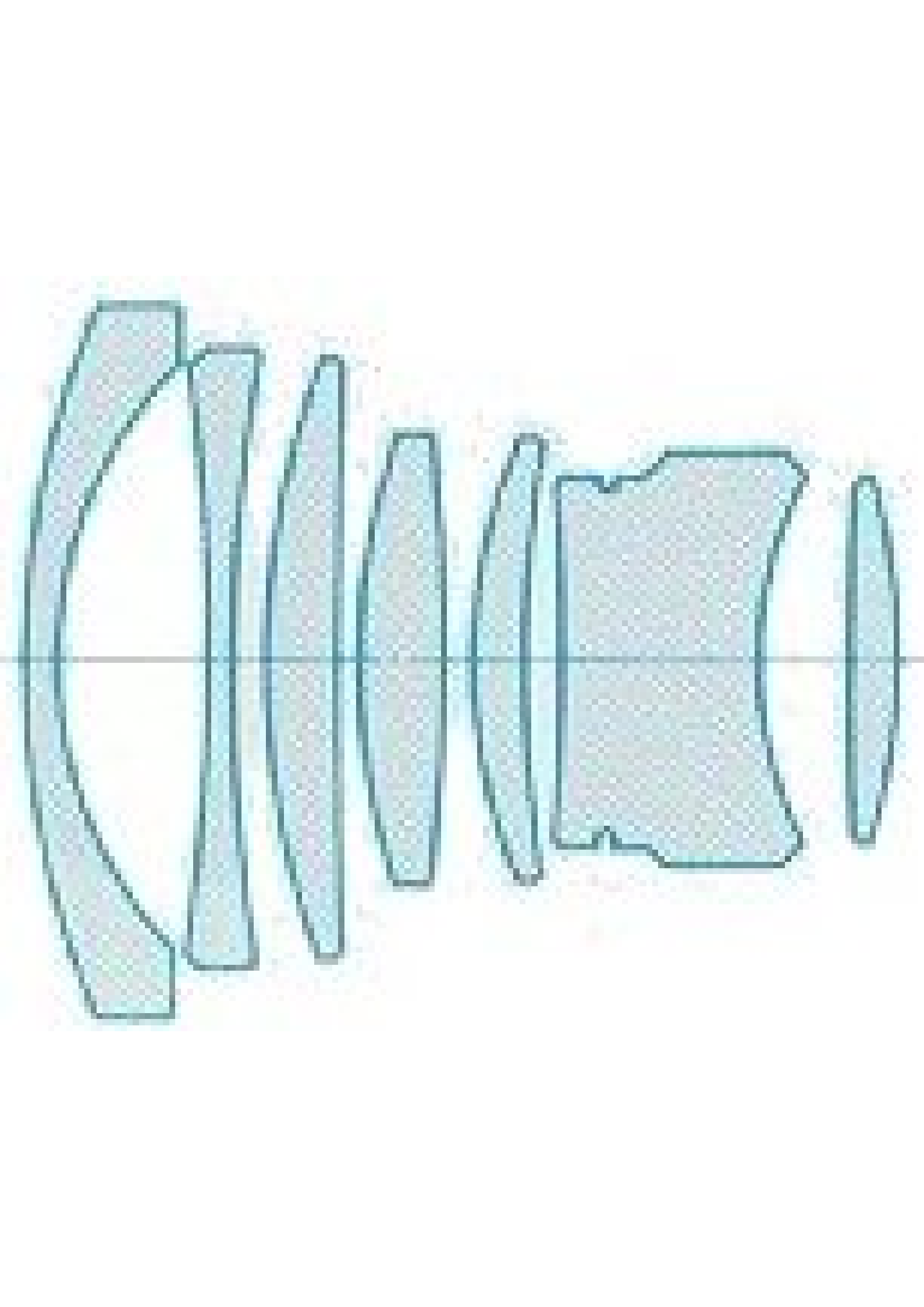

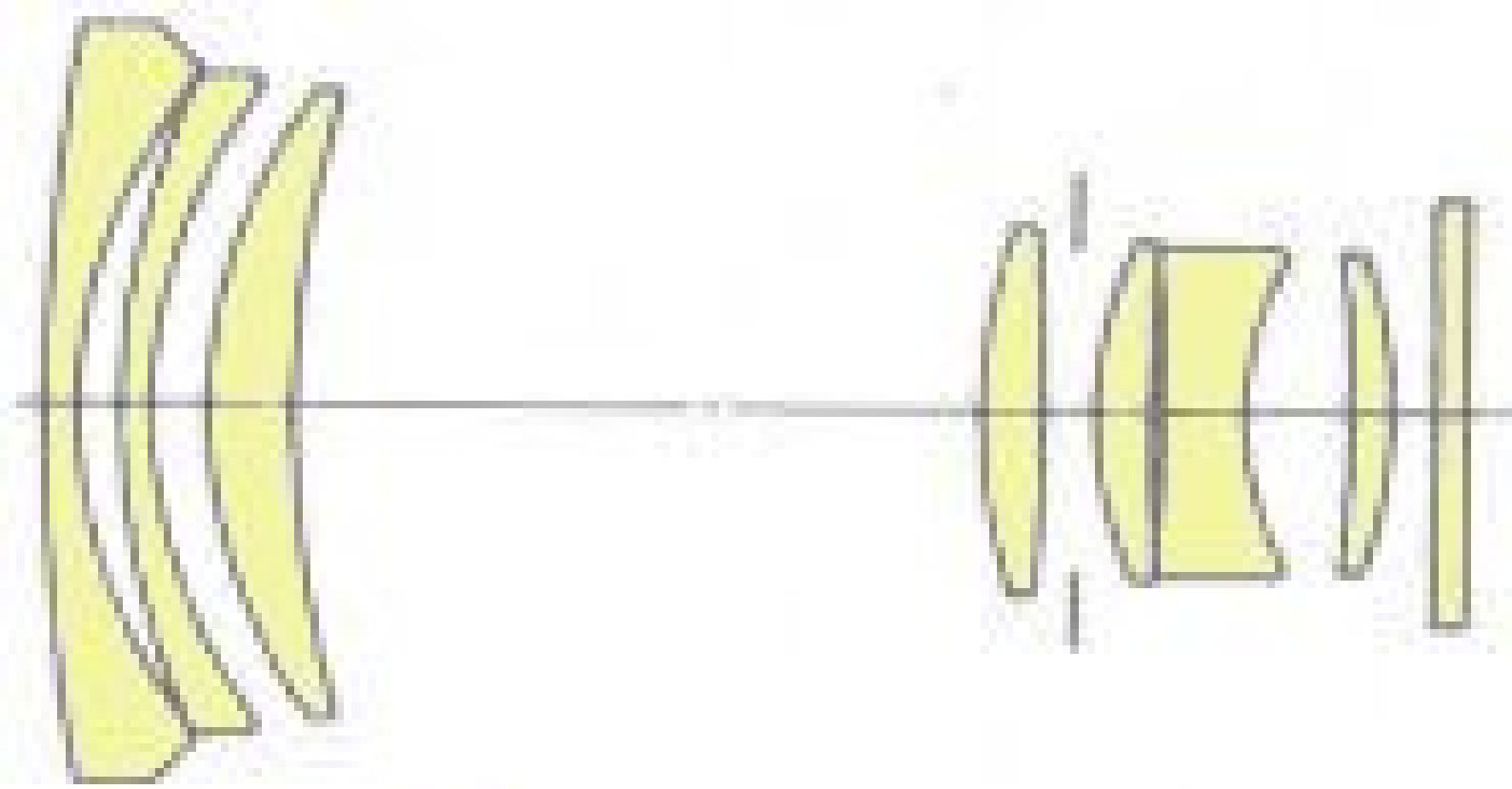

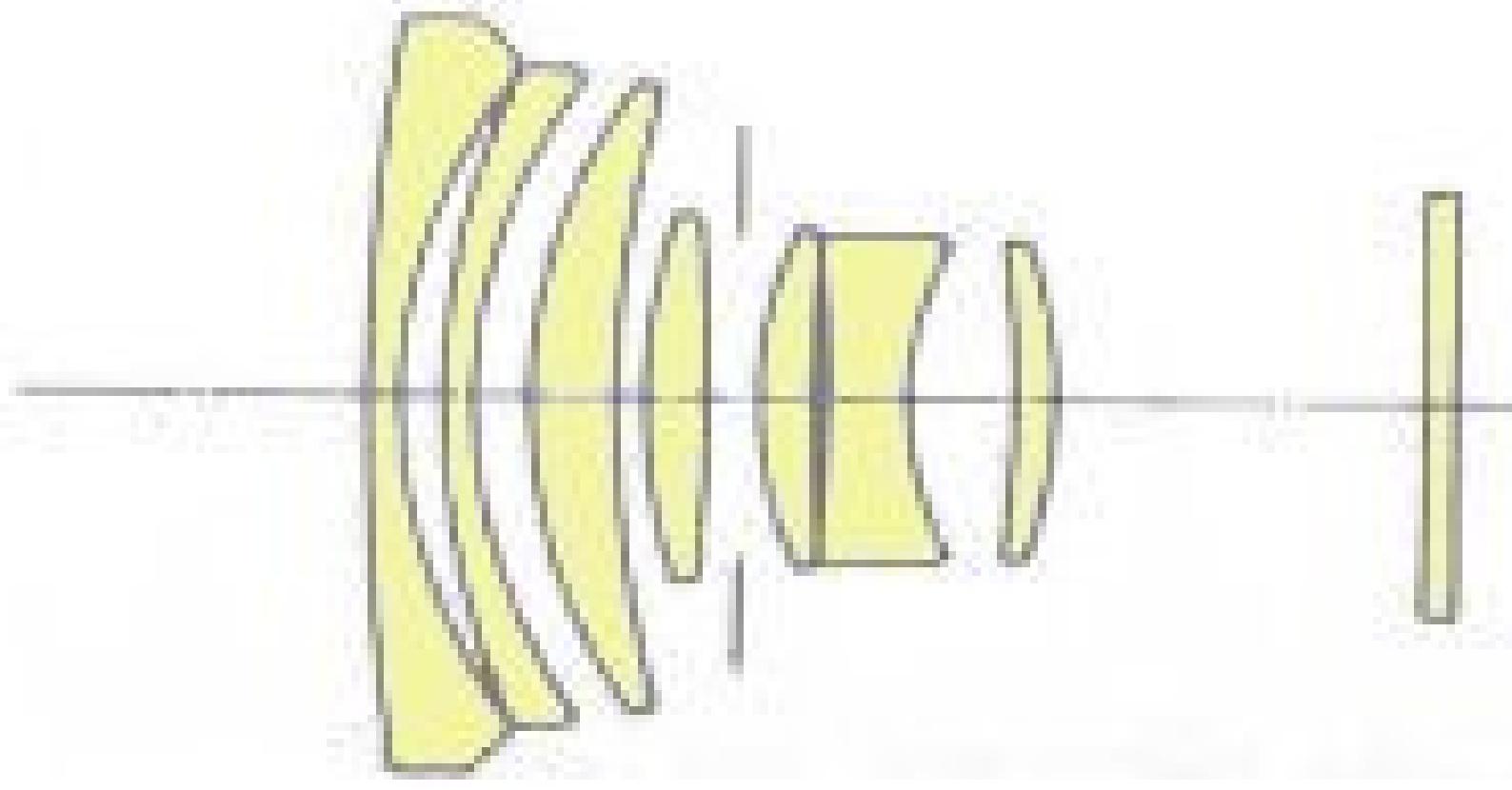

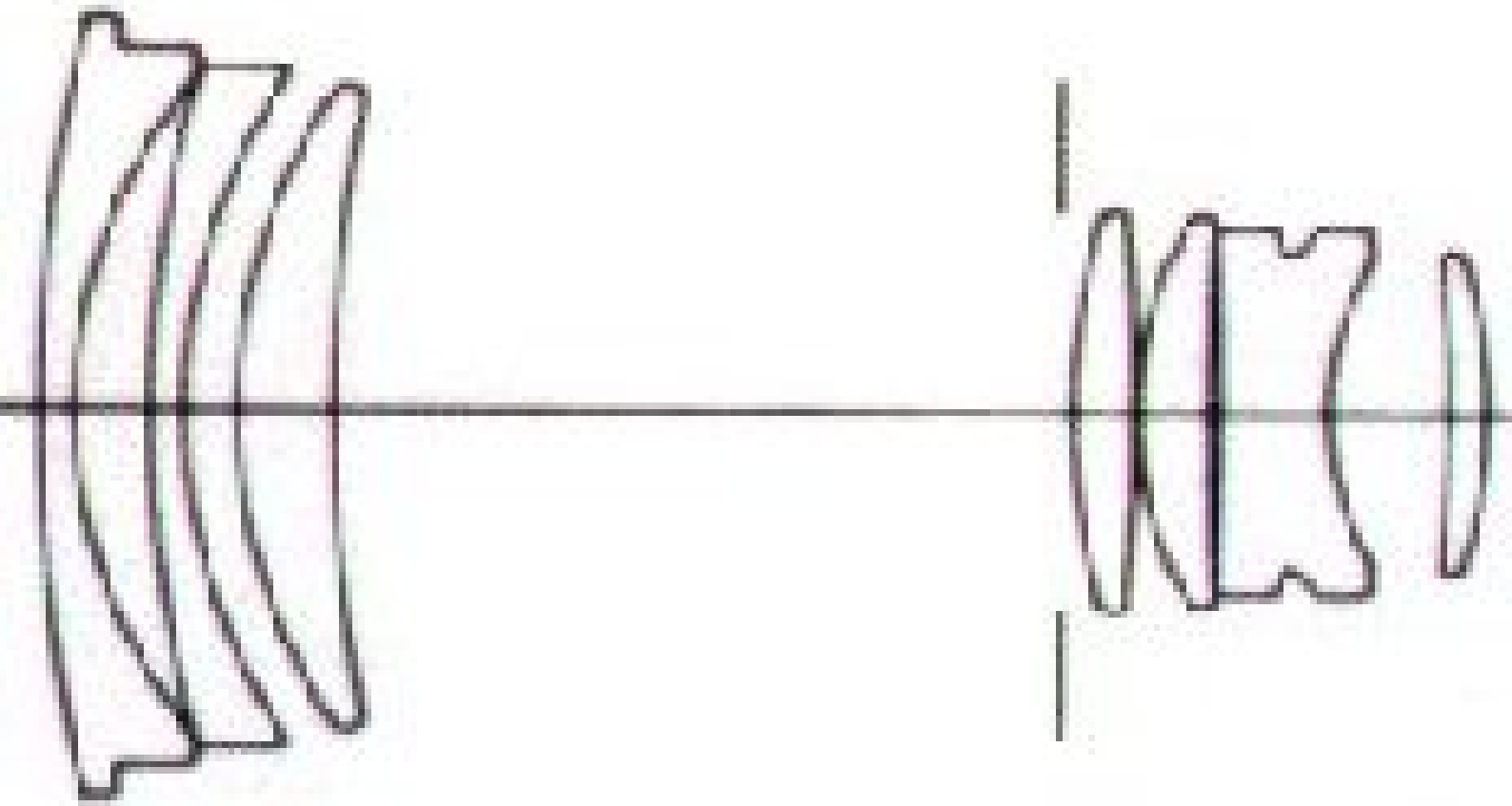

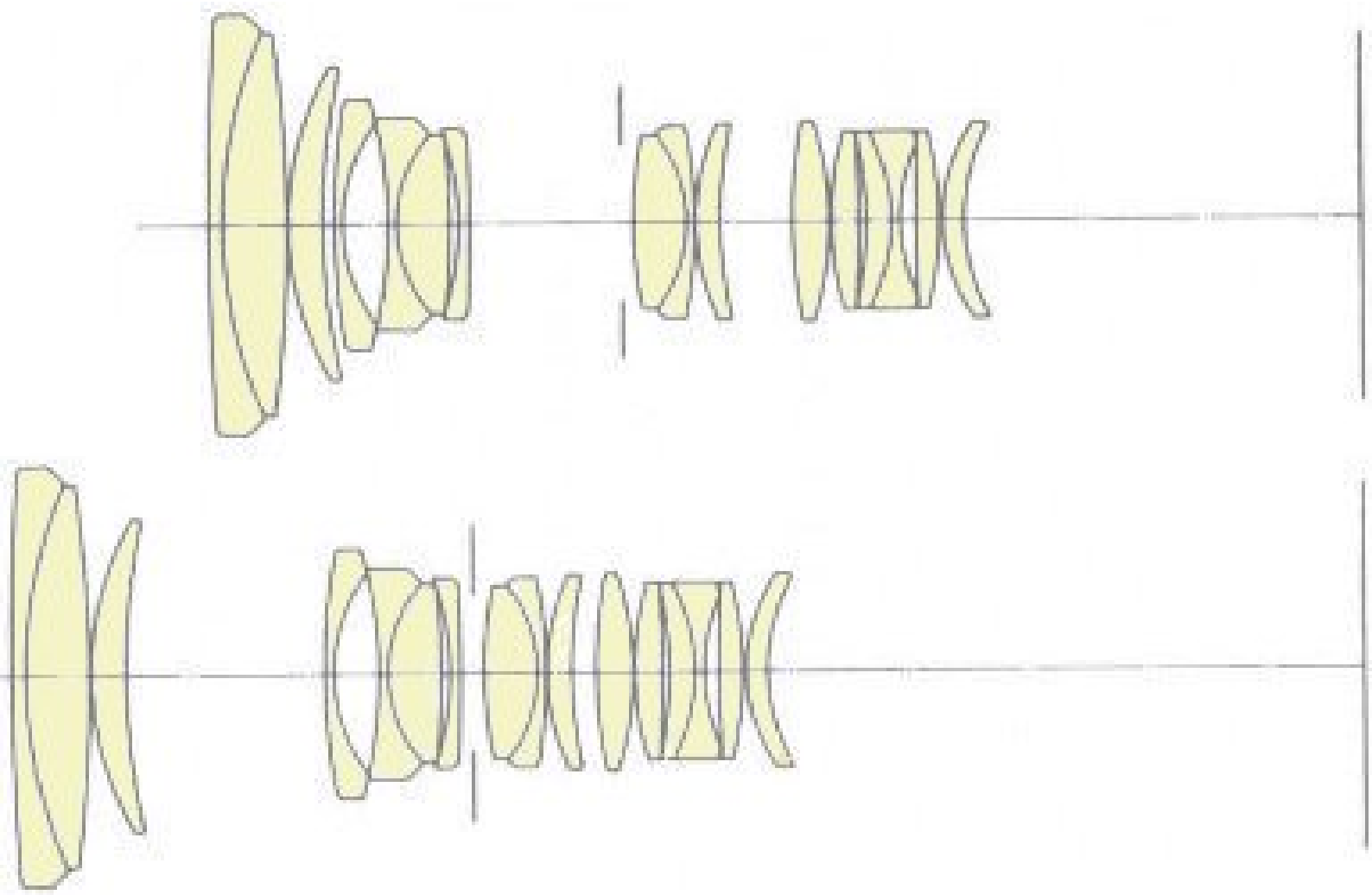

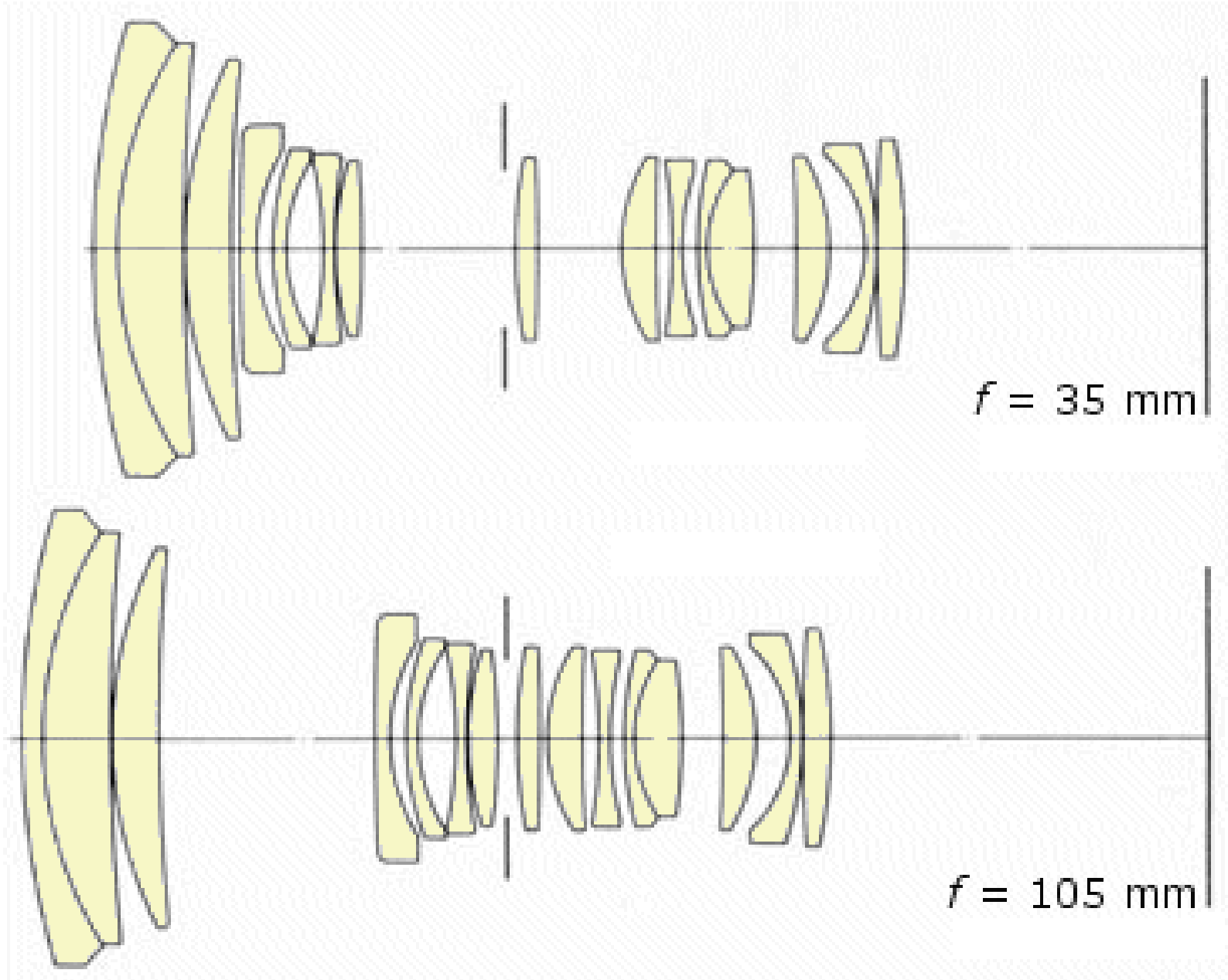
f = 35 mm
f = 105 mm

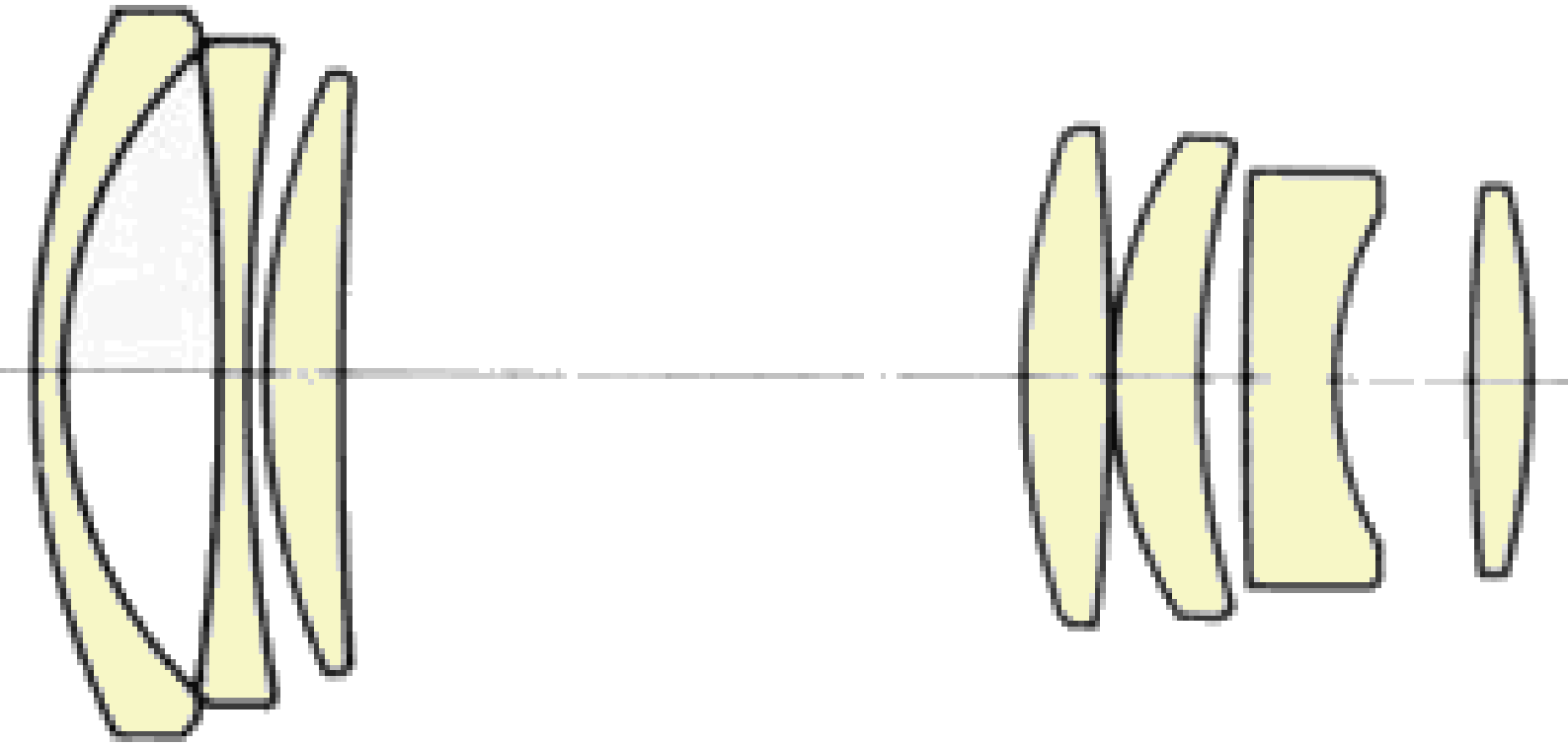

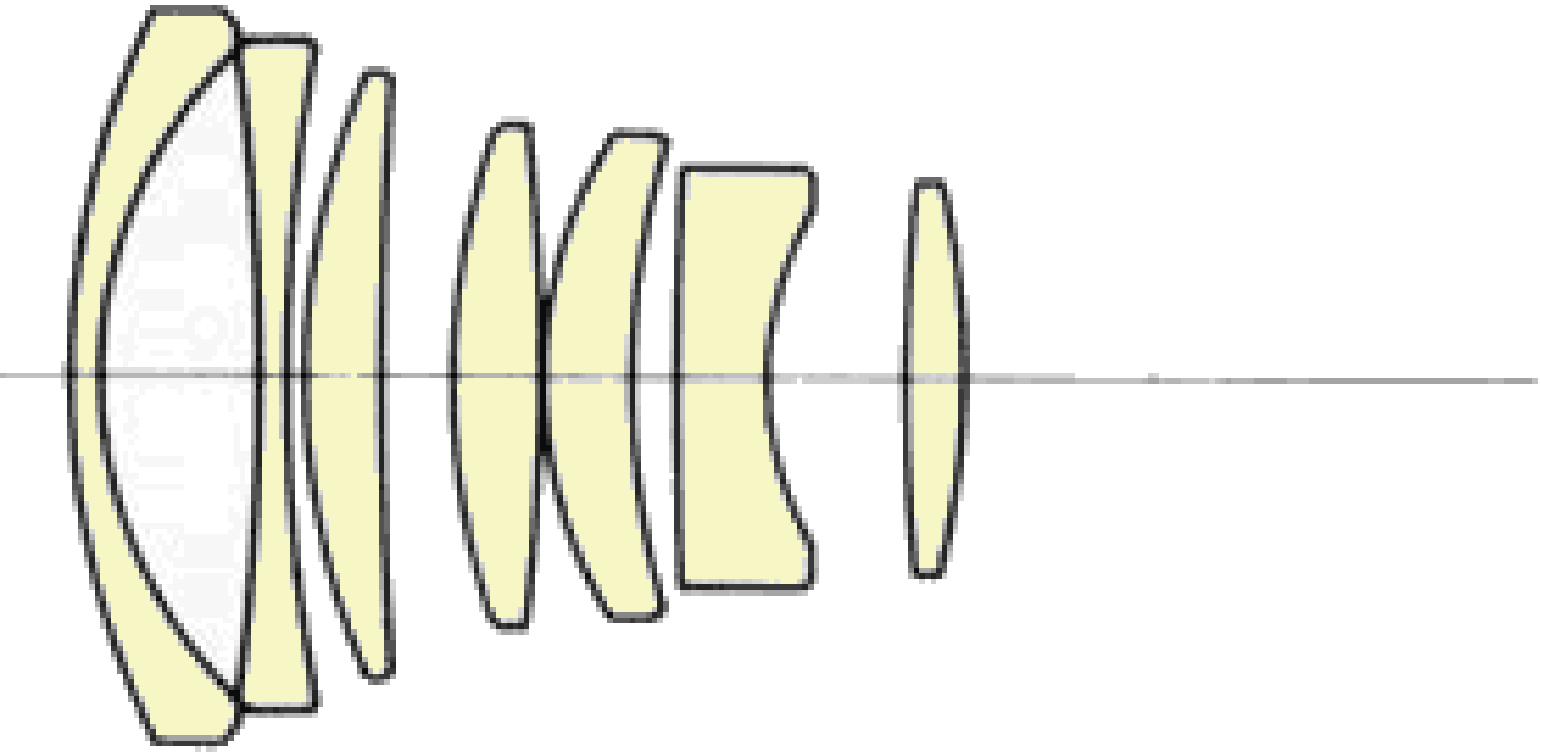

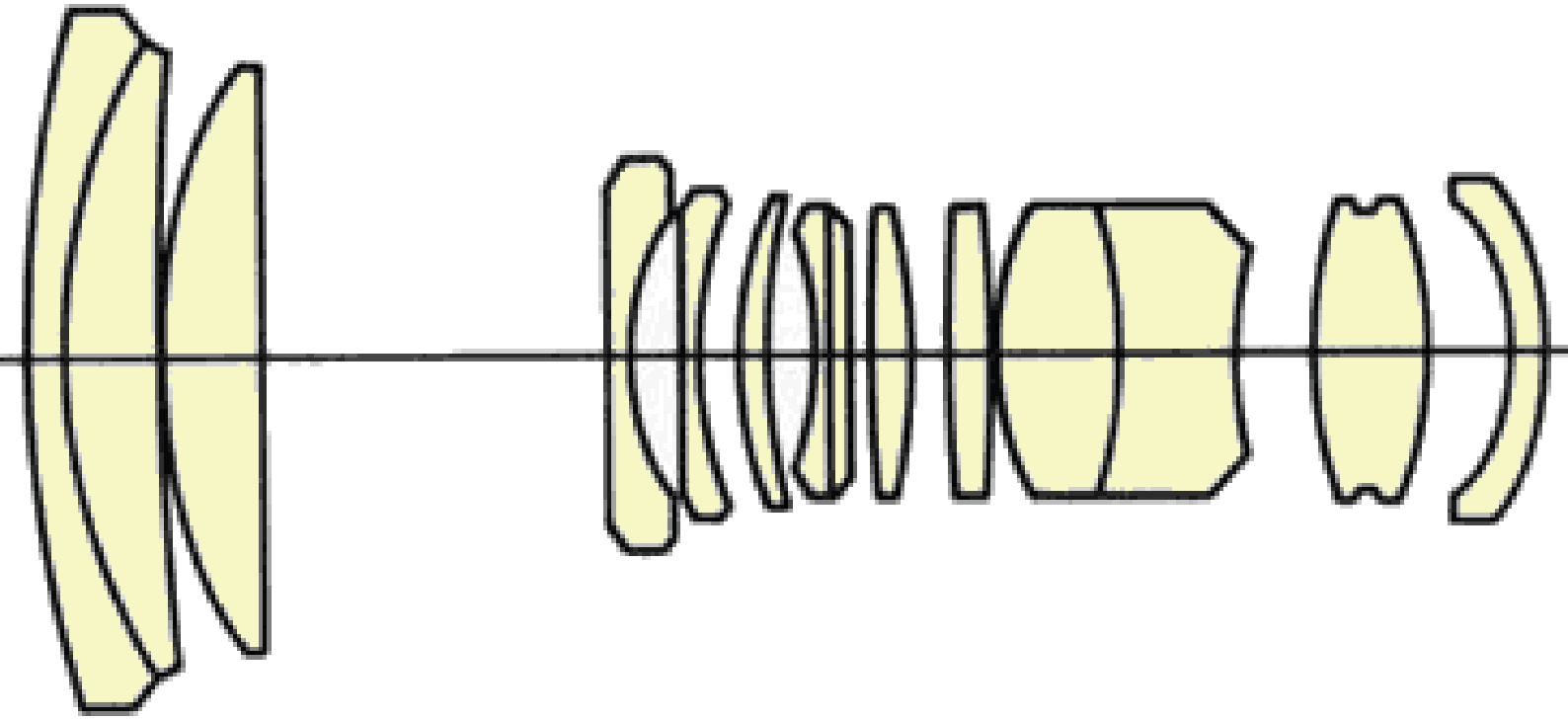

E.R.N.

Reed ©2000

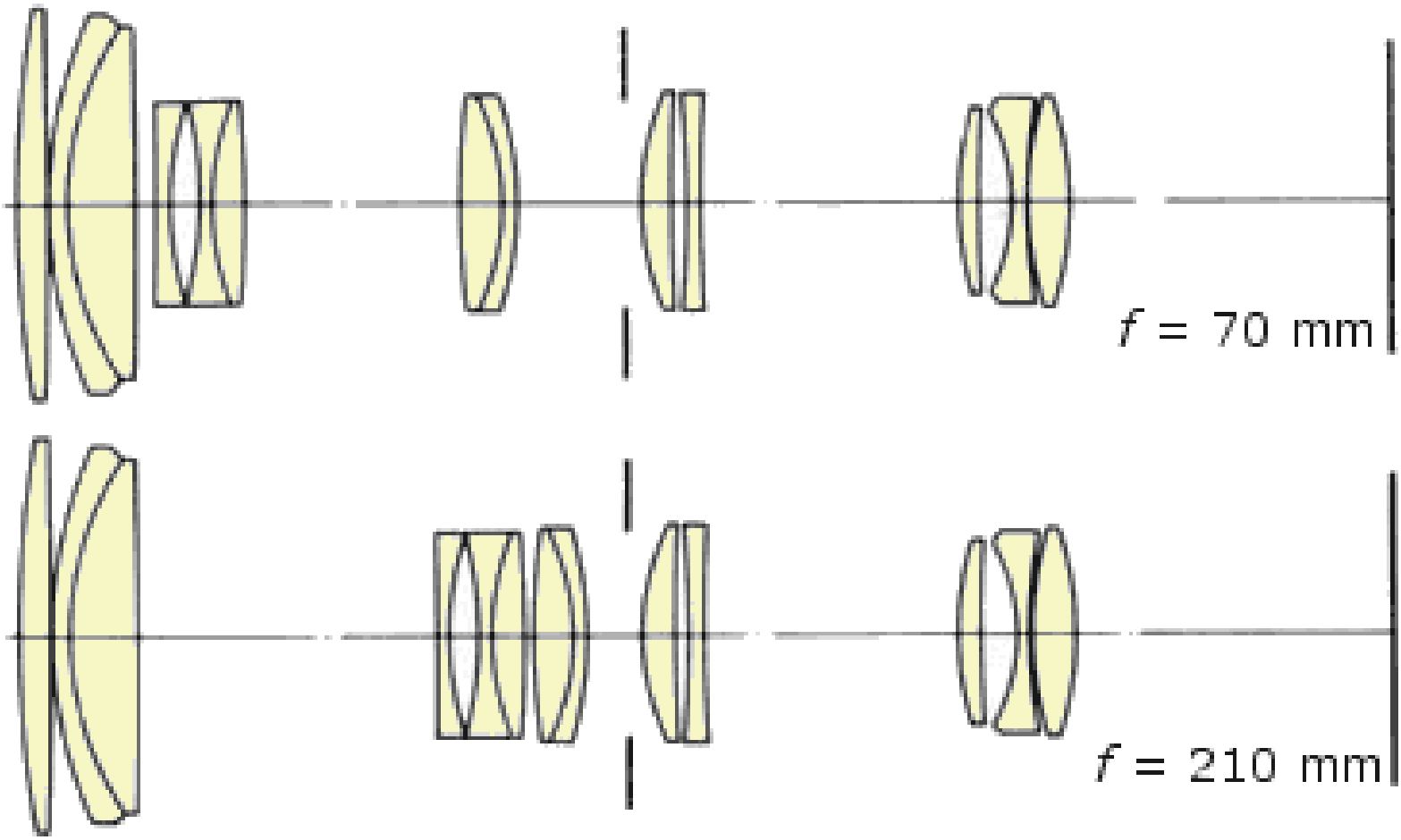
f = 70 mm
f = 210 mm

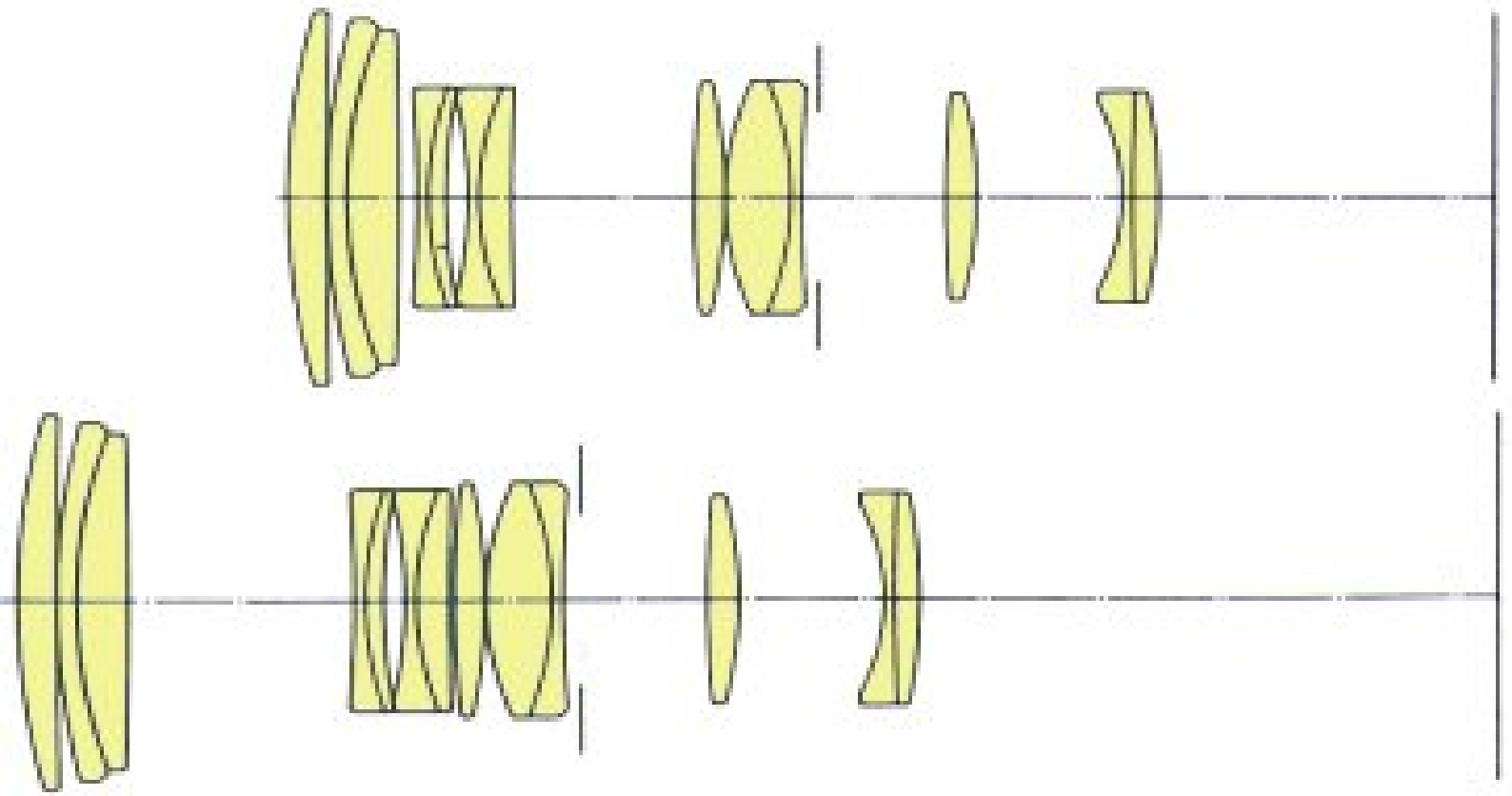

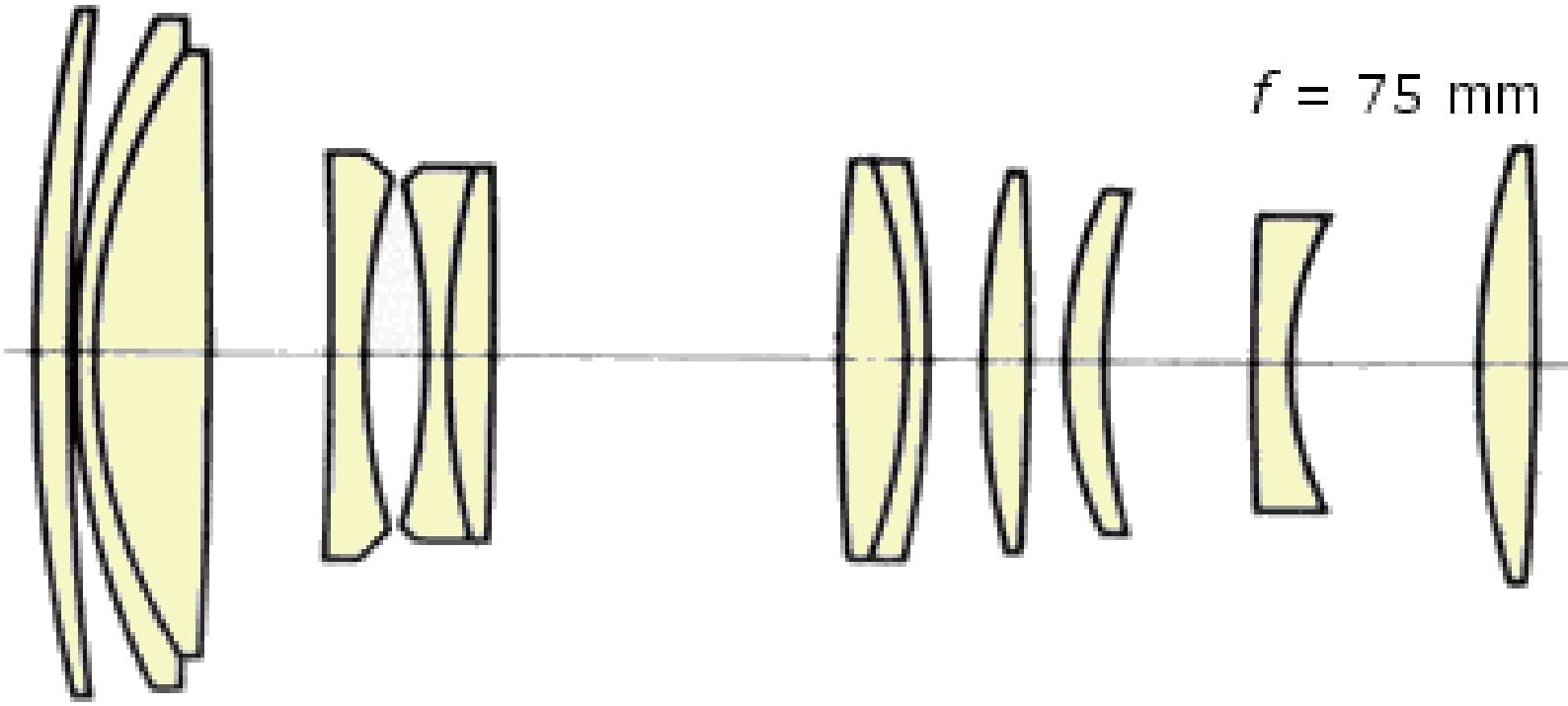
f = 75 mm

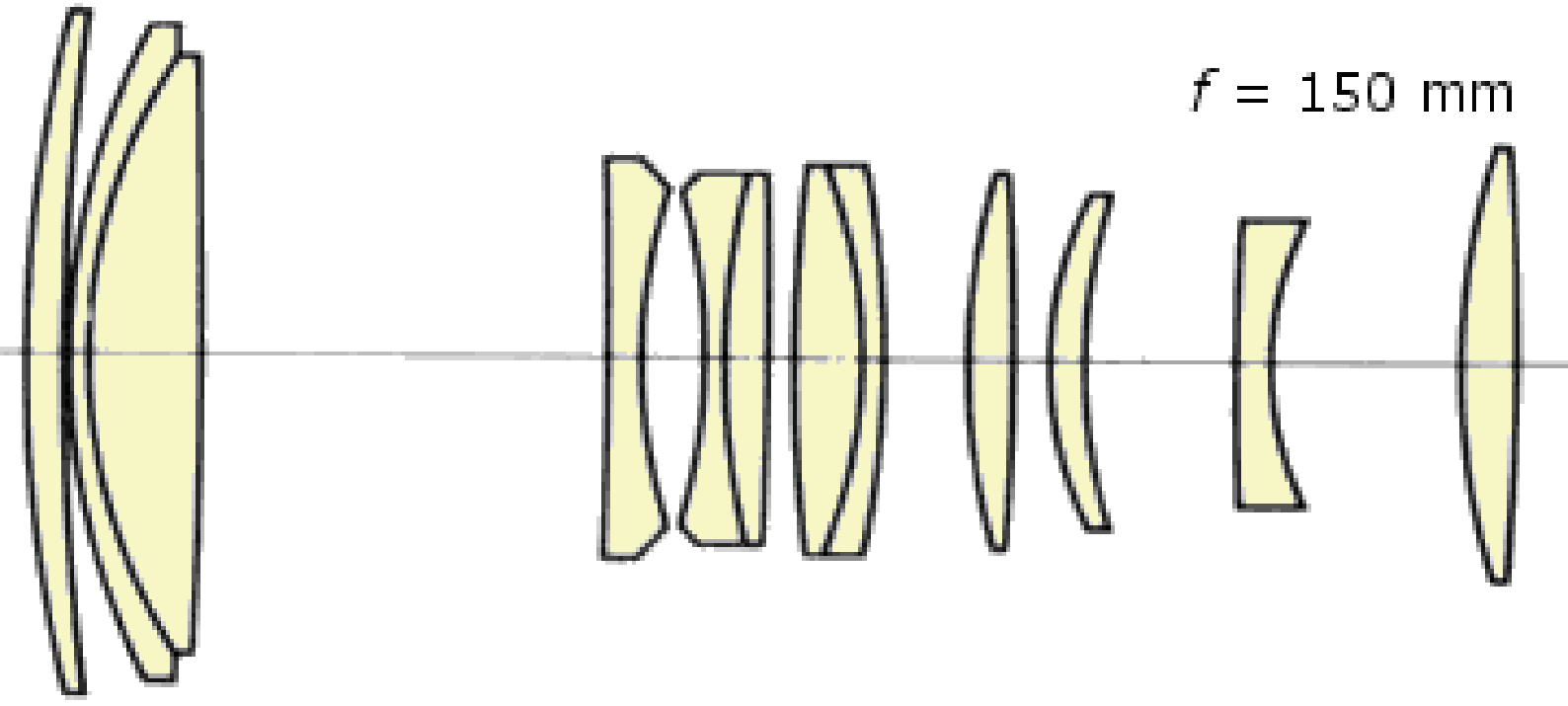
f = 150 mm

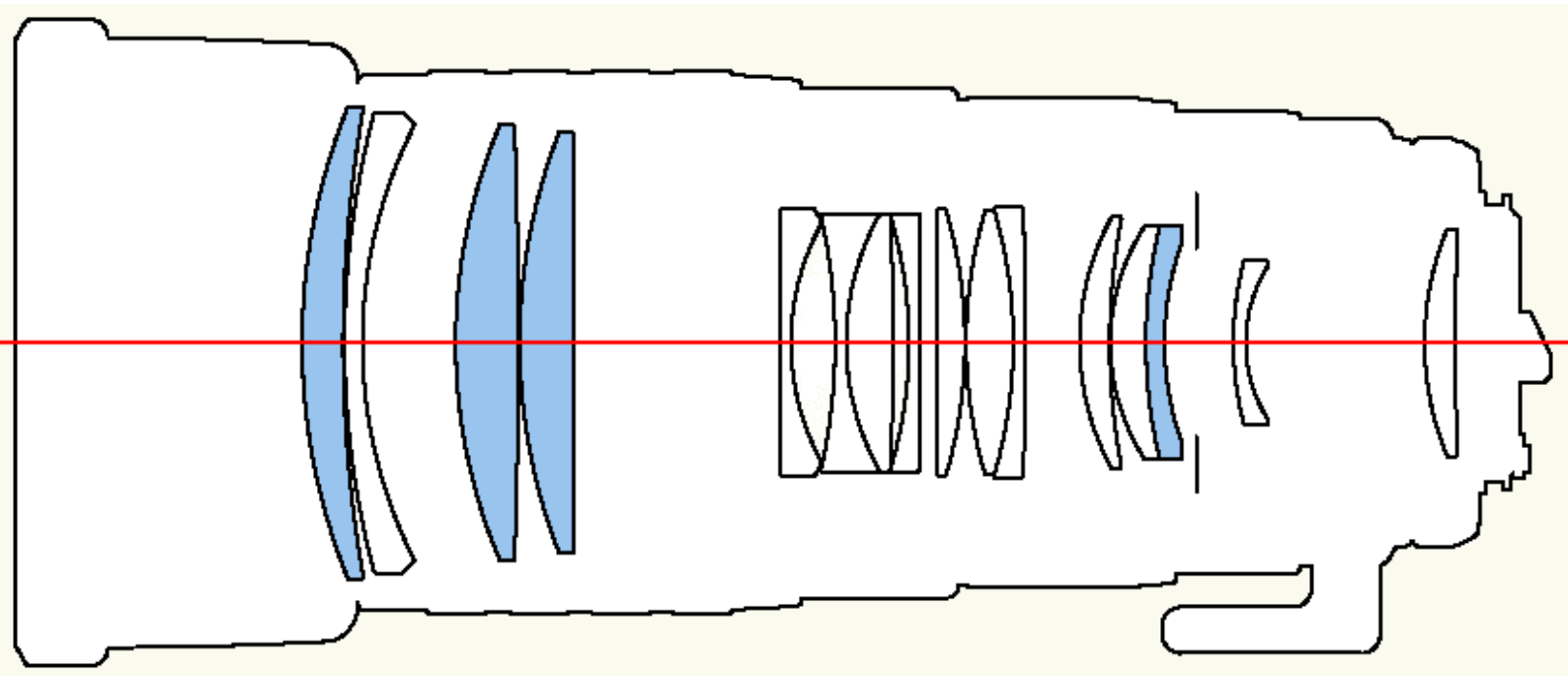

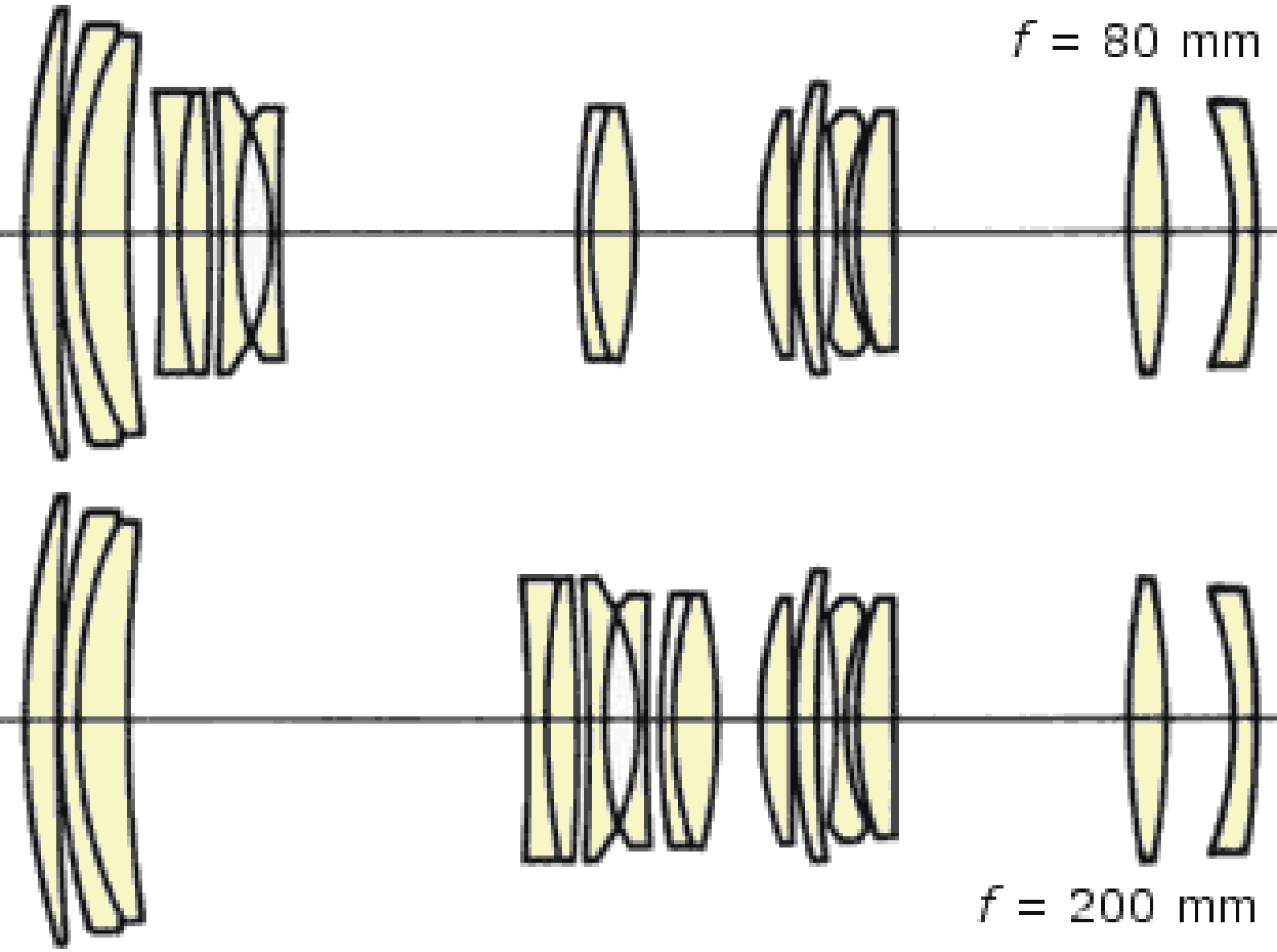
f = 80 mm
f = 200 mm

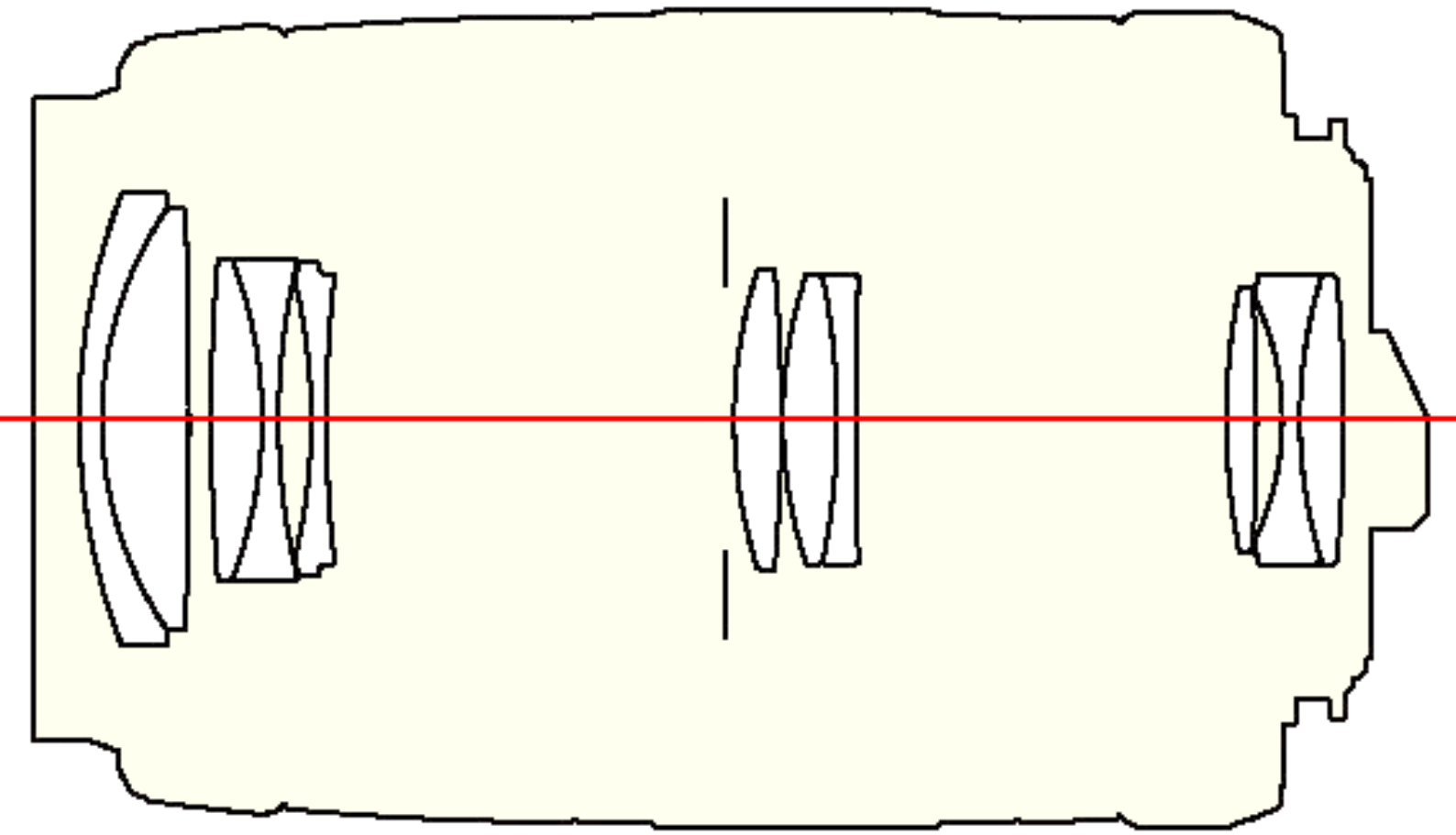

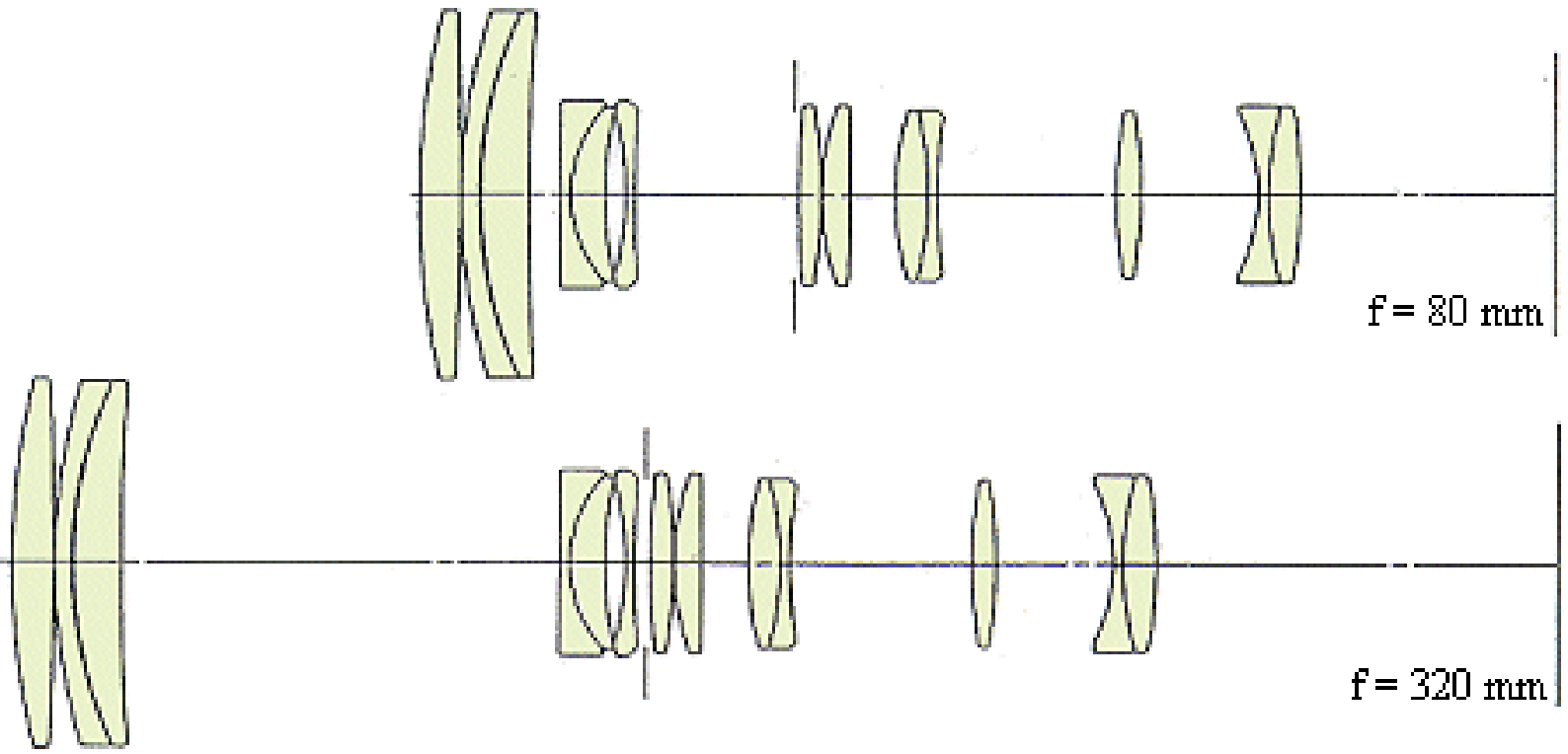
f = 80 mm
f = 320 mm

© Bojidar Dimitrov, 2002
PENTAX 80-320
PENTAX 80-320

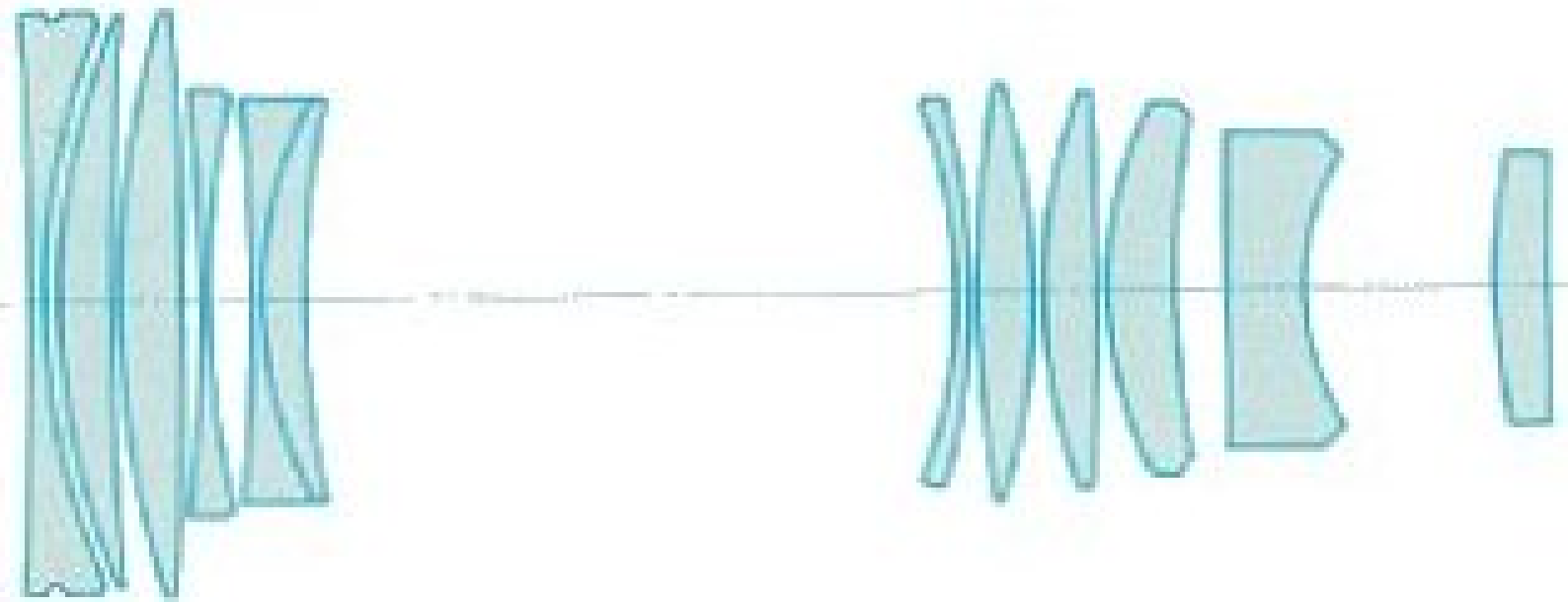

Steve Larson © 2001

© Albrecht Schneider, 2002

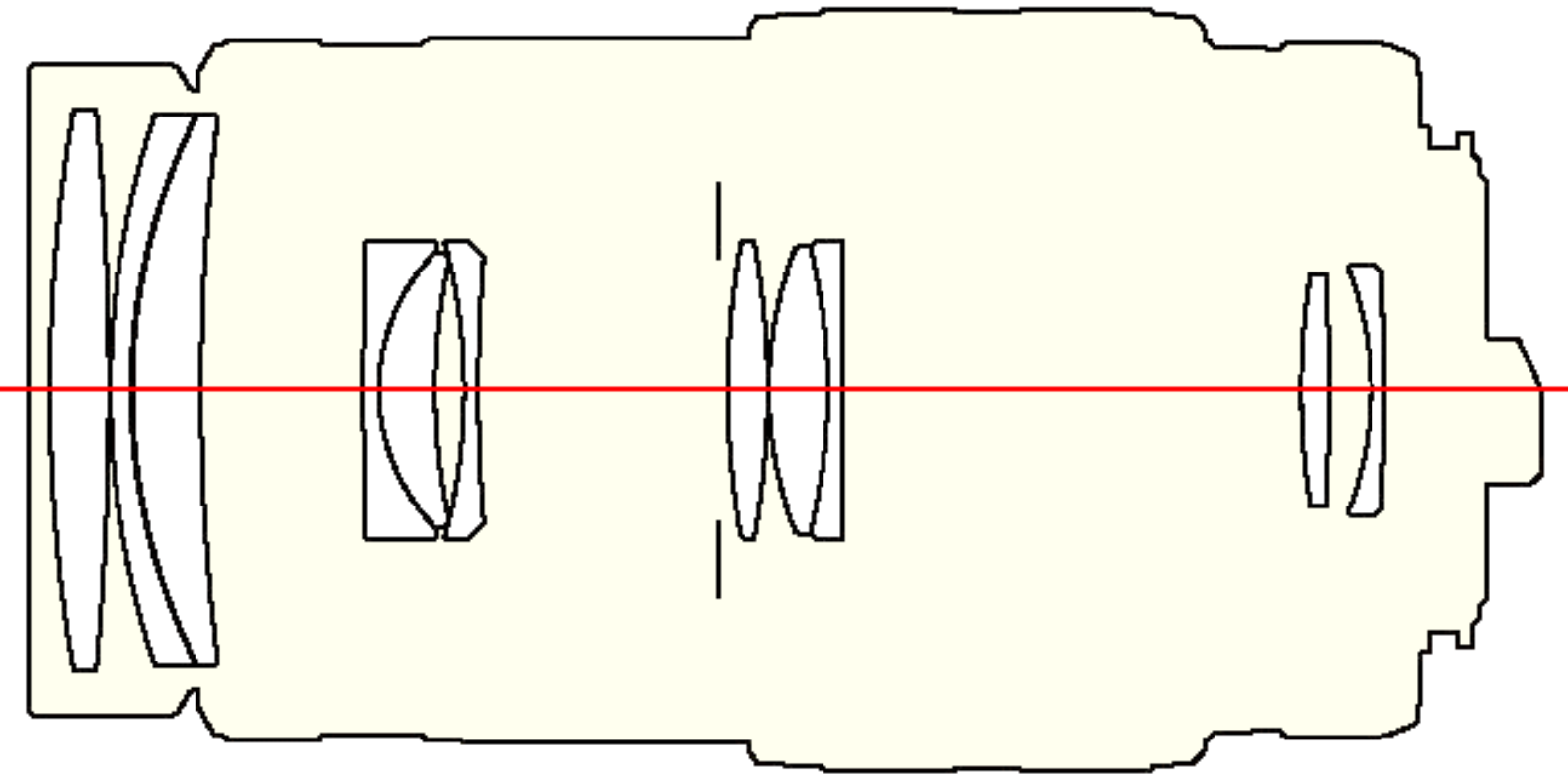

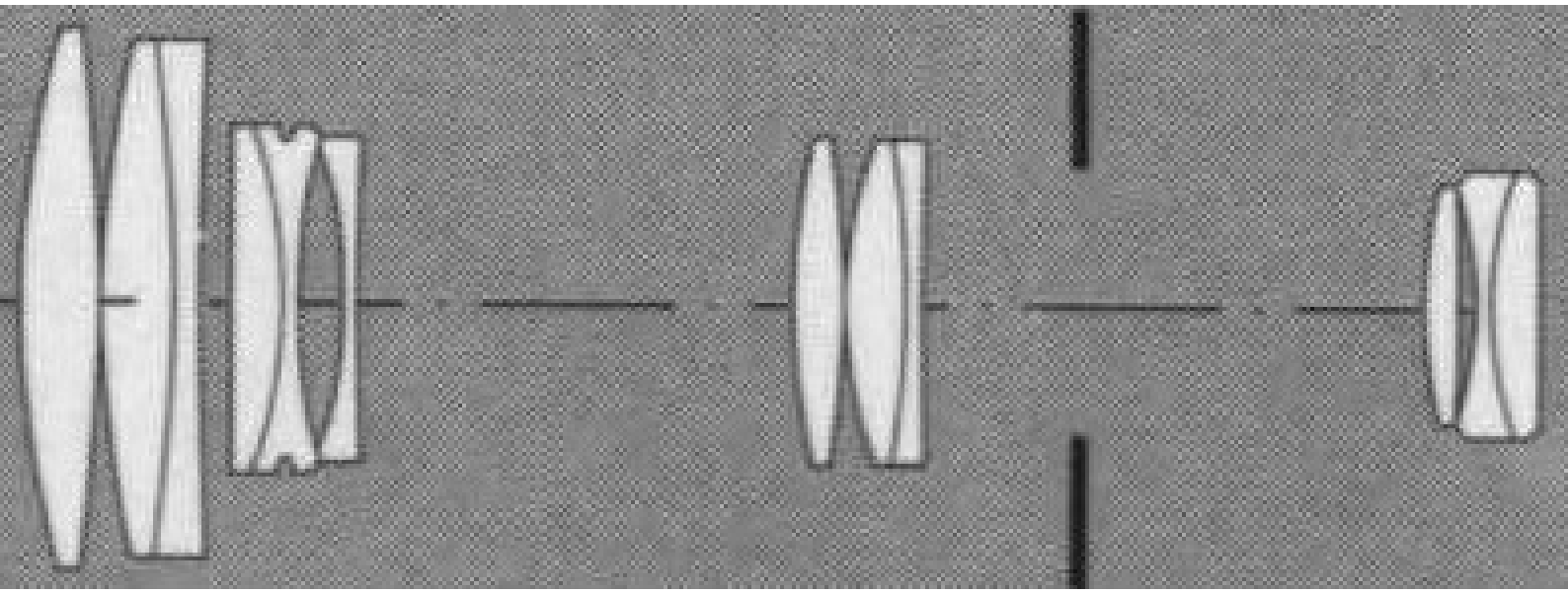

© Albrecht Schneider, 2002

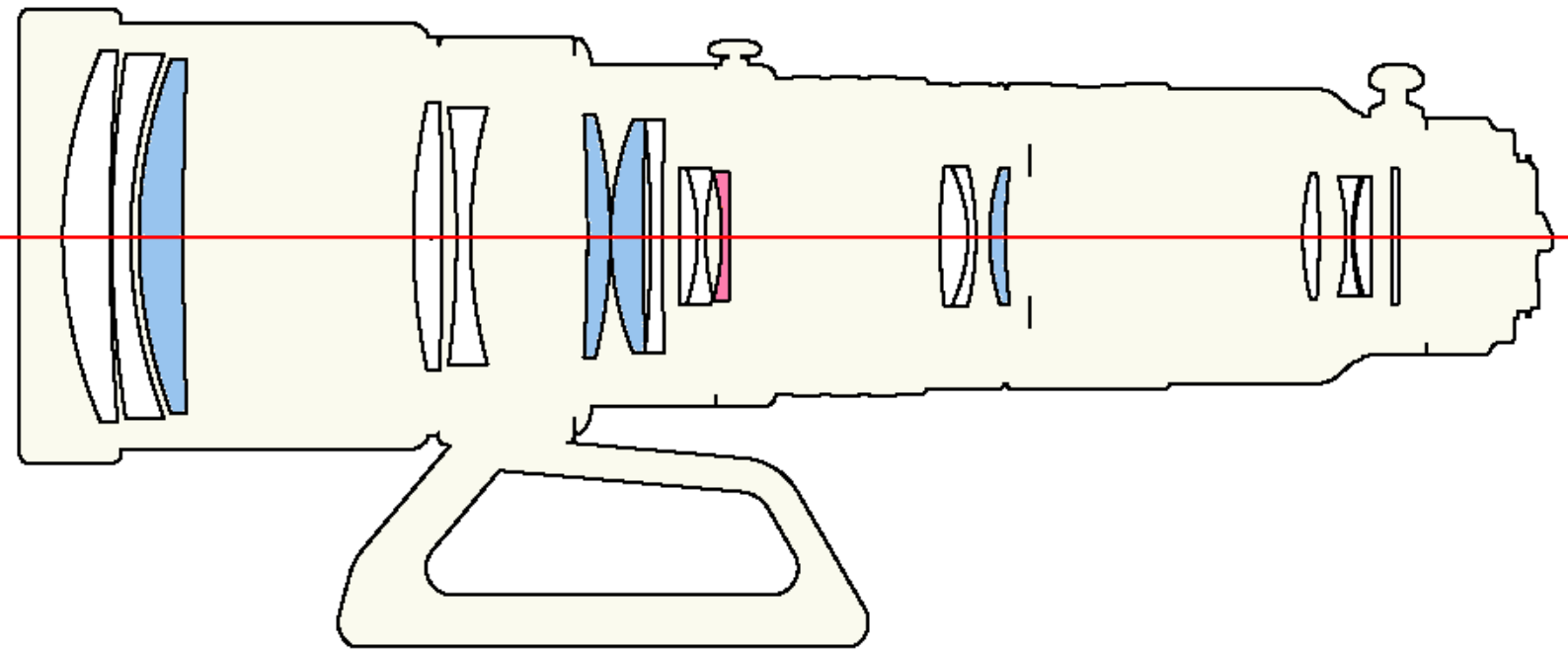

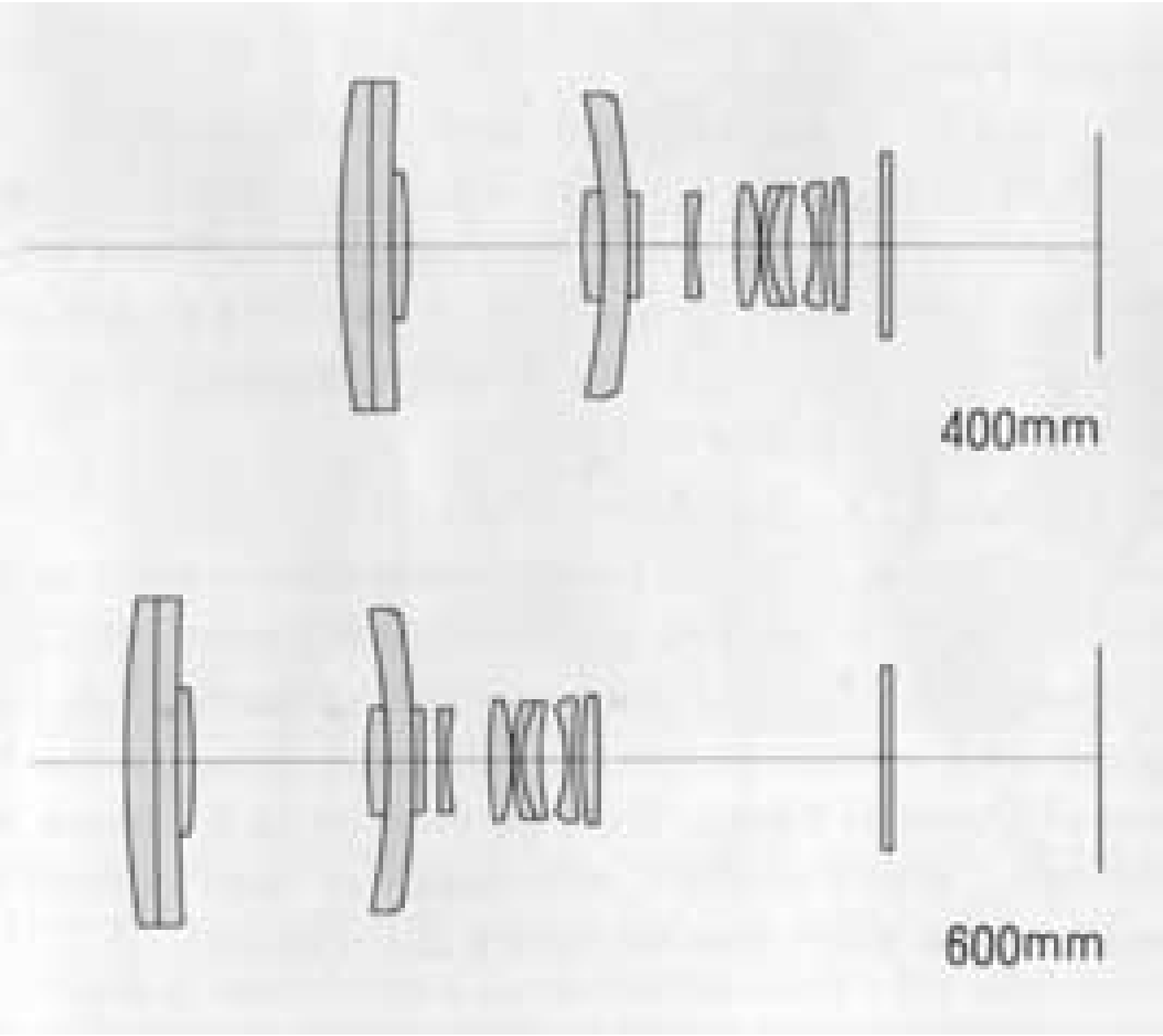
400mm
600mm

© Bojidar Dimitrov, 2002

Steve Larson © 2000

Extension cord F5P

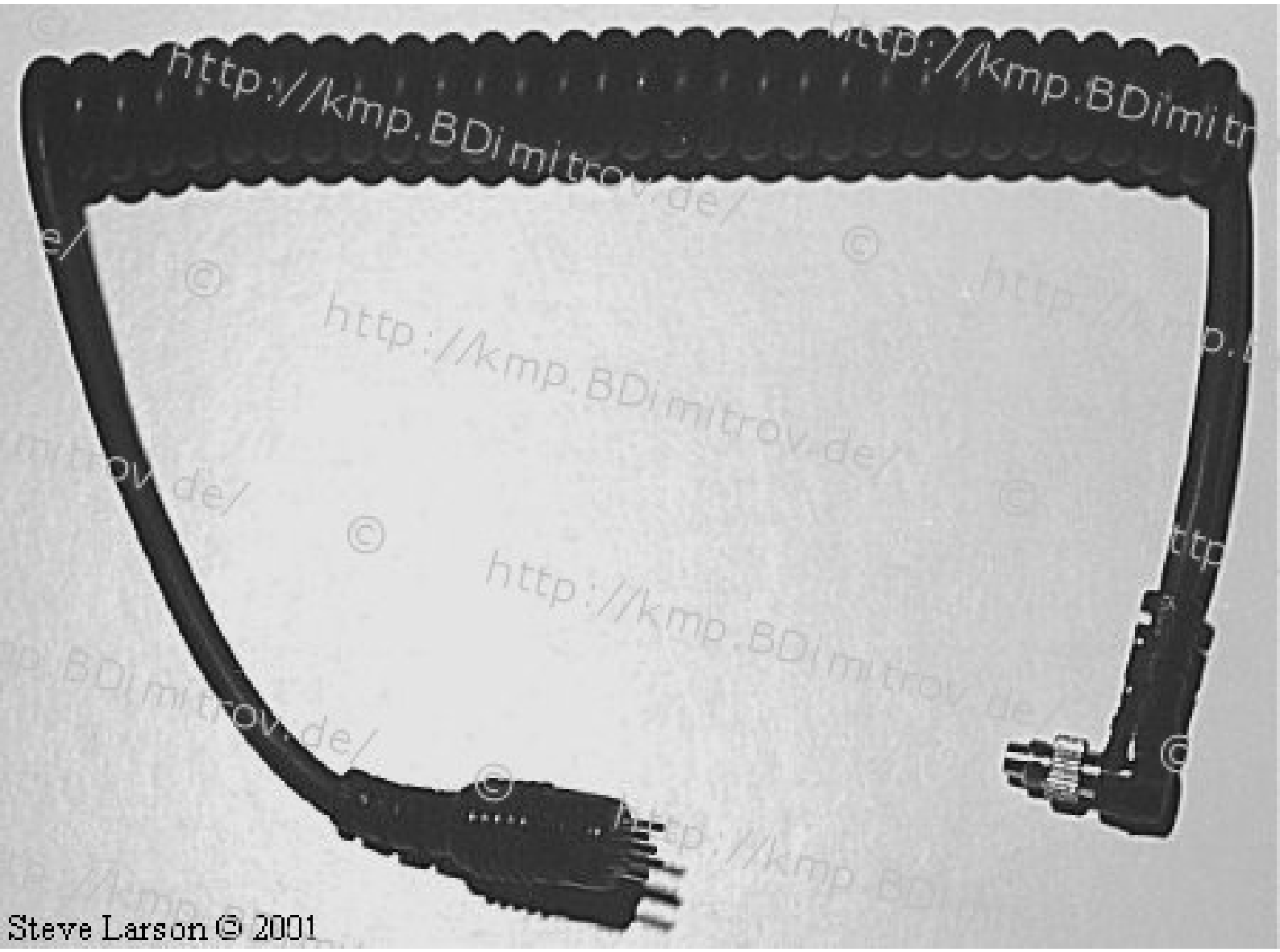
Steve Larson © 2001

© Ryan Lee, 2004

Extension cord F5PL

CAMERA
2
3
1

AUTO
SYNC
SET
SLOW
SUPER D
SYNC

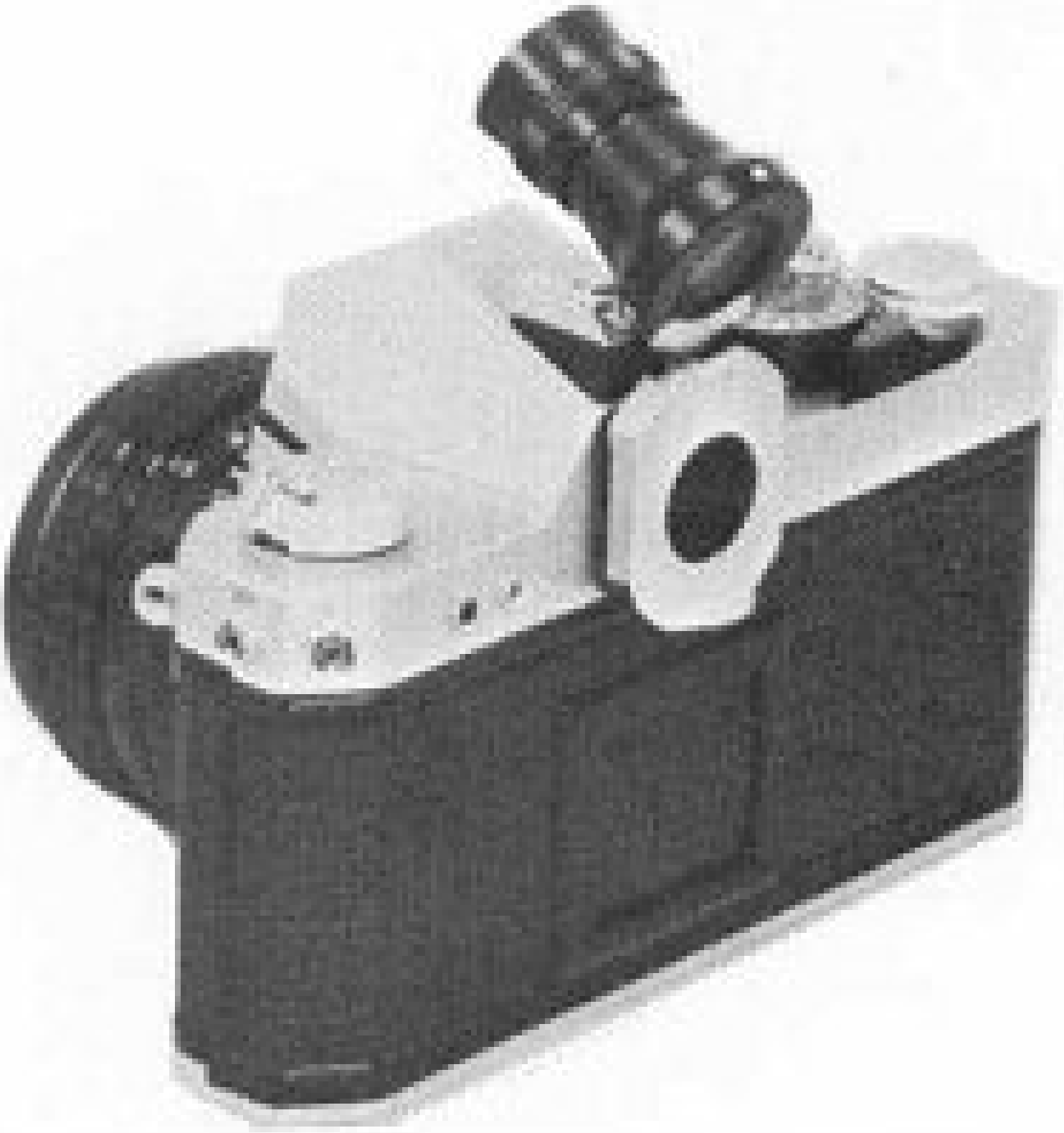

© Bojidar Dimitrov, 2003
PENTAX
PENTAX

ASAHI PENT

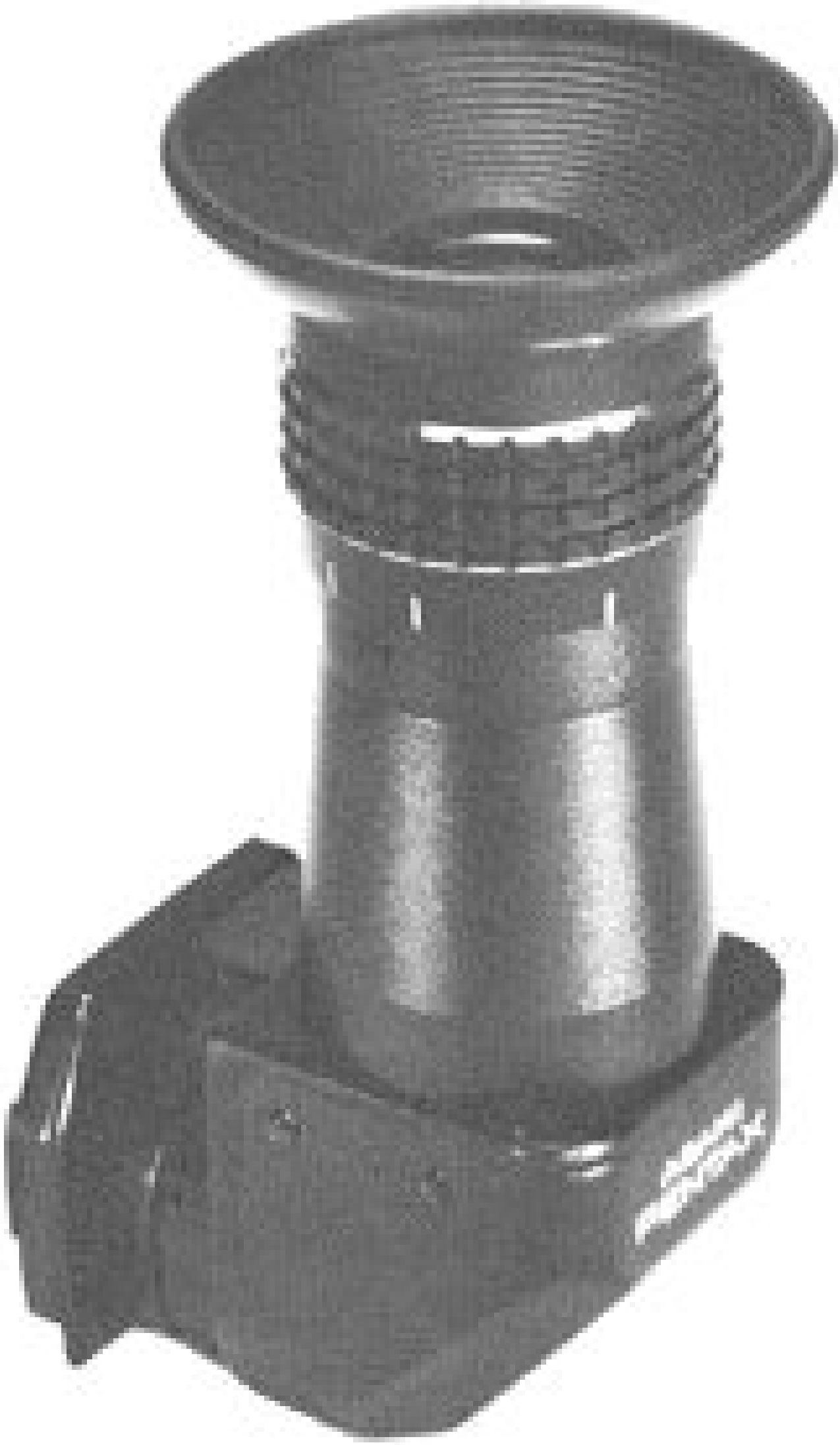

© Bojidar Dimitrov, 2003

Bob Sullivan © 2000

PENTAX ADAPTER K FOR 645 LENS

ADAPTER K FOR 6X7 LENS

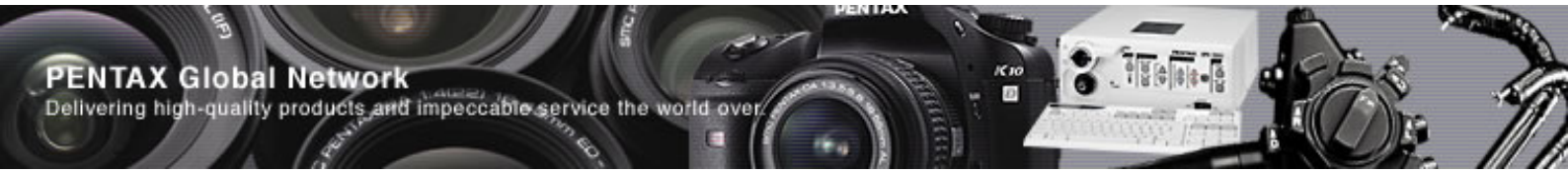
PENTAX Global Network
Delivering high-quality products and impeccable service the world over.
PENTAX
K10

ASAHI
PENTAX

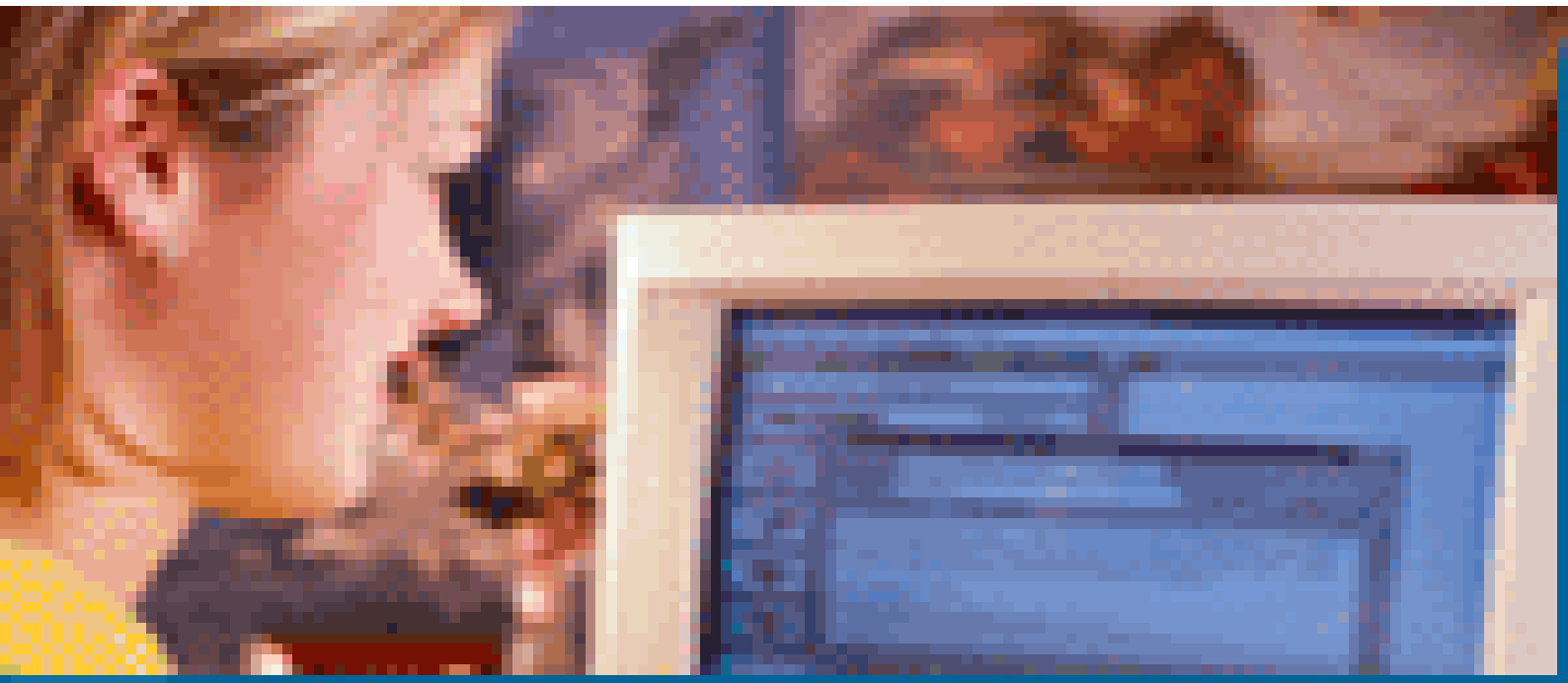

PERSONAL WEB PAGES

FOR MICROSCOPE LENS
PENTAX

AT&T Worldnet
Accelerator
BROWSE
UP TO 5X FASTER
Over Your Existing
Phone Line

© Bojidar Dimitrov, 2002

Copyright©2007 Peter J. Alling

Bokita
BANANA
De Gorilla's
Niet Kussen
en Aankijken

PENTAX
klub użytkowników

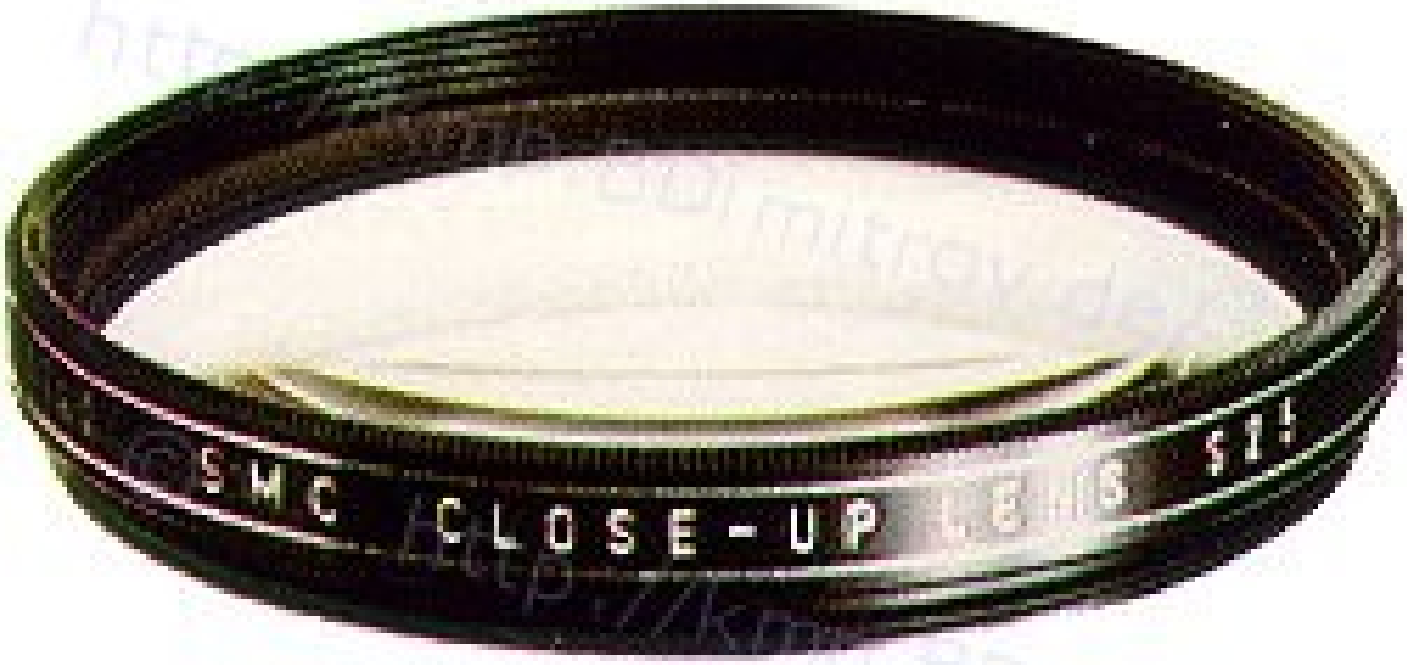
SMC CLOSE-UP

PENTAX
klub użytkowników

MONOCULAR CONVERTER K
MONOCULAR CONVERTER K
© Bojidar Dimitrov, 2002

MP4

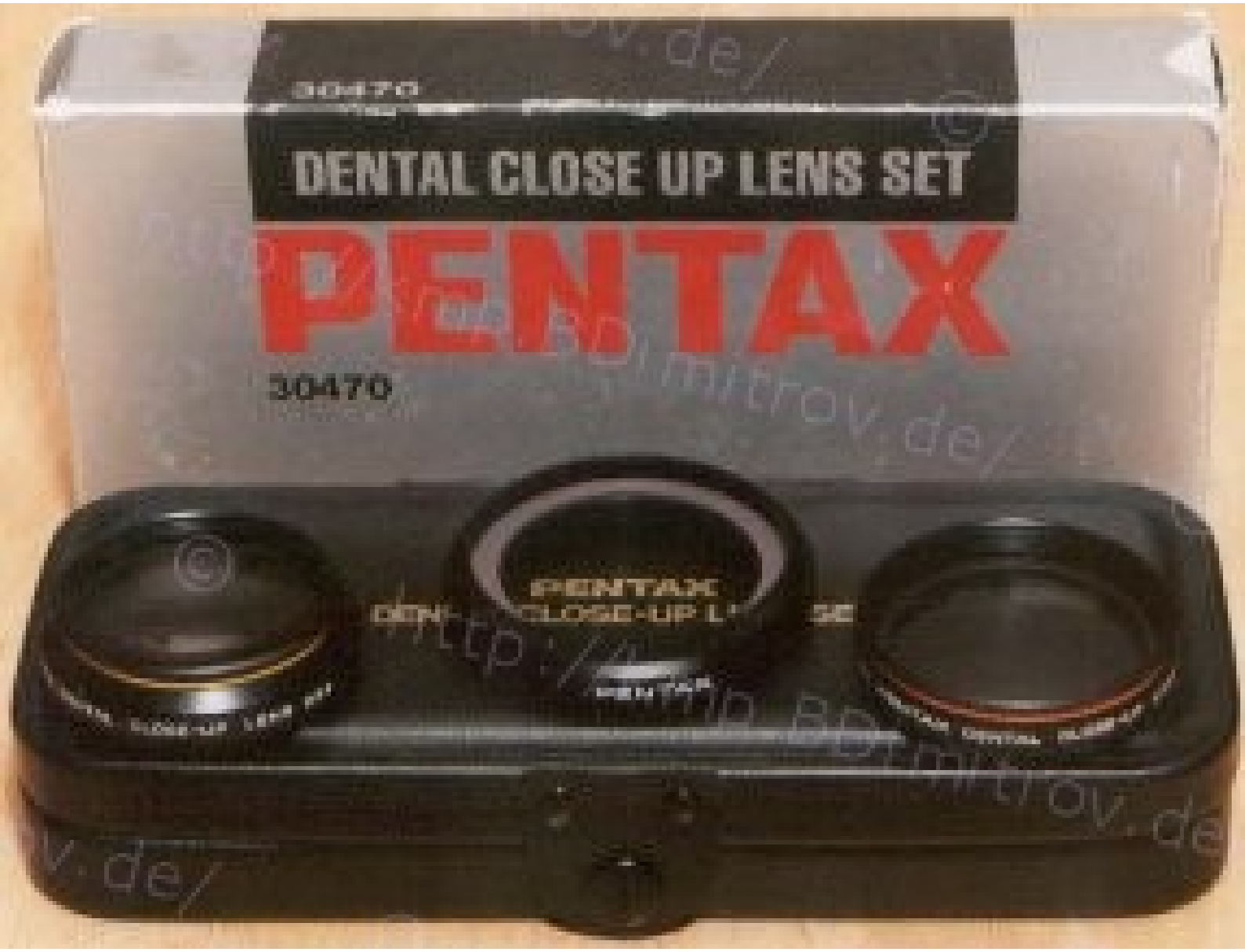
30470
DENTAL CLOSE UP LENS SET
PENTAX
30470
PENTAX
CLOSE-UP L
SE

Control unit for AF080C Ring Light
DS9
Close-up Lens
DS25
Close-up Lens
Magnet
Holder
AF080C
Ring Light
SMC Pentax M Dental
Macro 100mm f/4 Lens
Pentax 35mm
SLR Body

© Bojidar Dimitrov, 2003

Luxusowa jakość!!!

Najniższe ceny w Europie!

100mm
© Bojidar Dimitrov, 2003

Photo: courtesy Preston Cook

PENTAX
MZ-M

ASAHI
PENTAX

ELECTRO
SPOTMATIC
ASAHI
PENTAX
ASAHI OPT. CO., JAPAN
Super-Multi-Coated
TAKUMAR
1:3.5/35
S16105

ES
ASAHI
PENTAX

ASAHI
PENTAX
FP
Asahi Opt. Co.
Lens made in Japan
Auto-Takumar

PENTAX
TITANIUM
PENTAX

PENTAX

PENTAX
P30
smc PENTAX-A 1:1.7 50mm
1540503

PENTAX
super A
smc PENTAX-A 1:1.4 50mm

PENTAX
1489756 ASAHI OPT. CO., JAPAN
80mm 1:1.2

Copyright © 2002 by Dario Bonazza
PENTAX
smc PENTAX-A 1:1.4 50mm

Asahi Pentax ESII + SMC Takumar 50/1.4

PENTAX
ME Super
SMC PENTAX-M 1:1.4 50mm
6067626 ASAHI OPT CO., JAPAN

PENTAX
SMC PENTAX-M 1:1.4 50mm
ASAHI OPT. CO., JAPAN

HELICOID EXTENSION TUBE K
HELICOID EXTENSION TUBE K
© Bojidar Dimitrov, 2003

PENTAX
MX
SMC PENTAX-M 1:1.7 50mm
ASAHI OPT. CO., JAPAN

KM
ASAHI
PENTAX
ASAHI OPT. CO., JAPAN
SMC PENTAX
1:1.4/50
1513151

ASAHI
PENTAX
K1000
SMC PENTAX 1:2 55mm
ASAHI OPT. CO., JAPAN

ASAHI
PENTAX
K2
SMC PENTAX 1:1.2/50
ASAHI OPT. CO. JAPAN

ASAHI
PENTAX
KX
SMC PENTAX 1:1.4/50
ASAHI OPT. CO.
JAPAN

© Bojidar Dimitrov, 2003

PENTAX
ME
SMC PENTAX-M 1:1.7 50mm
2303850 ASAHI OPT CO., JAPAN

ASAHI
PENTAX
Asahi Opt. Co. Japan
Takumar 1:2 f=50mm

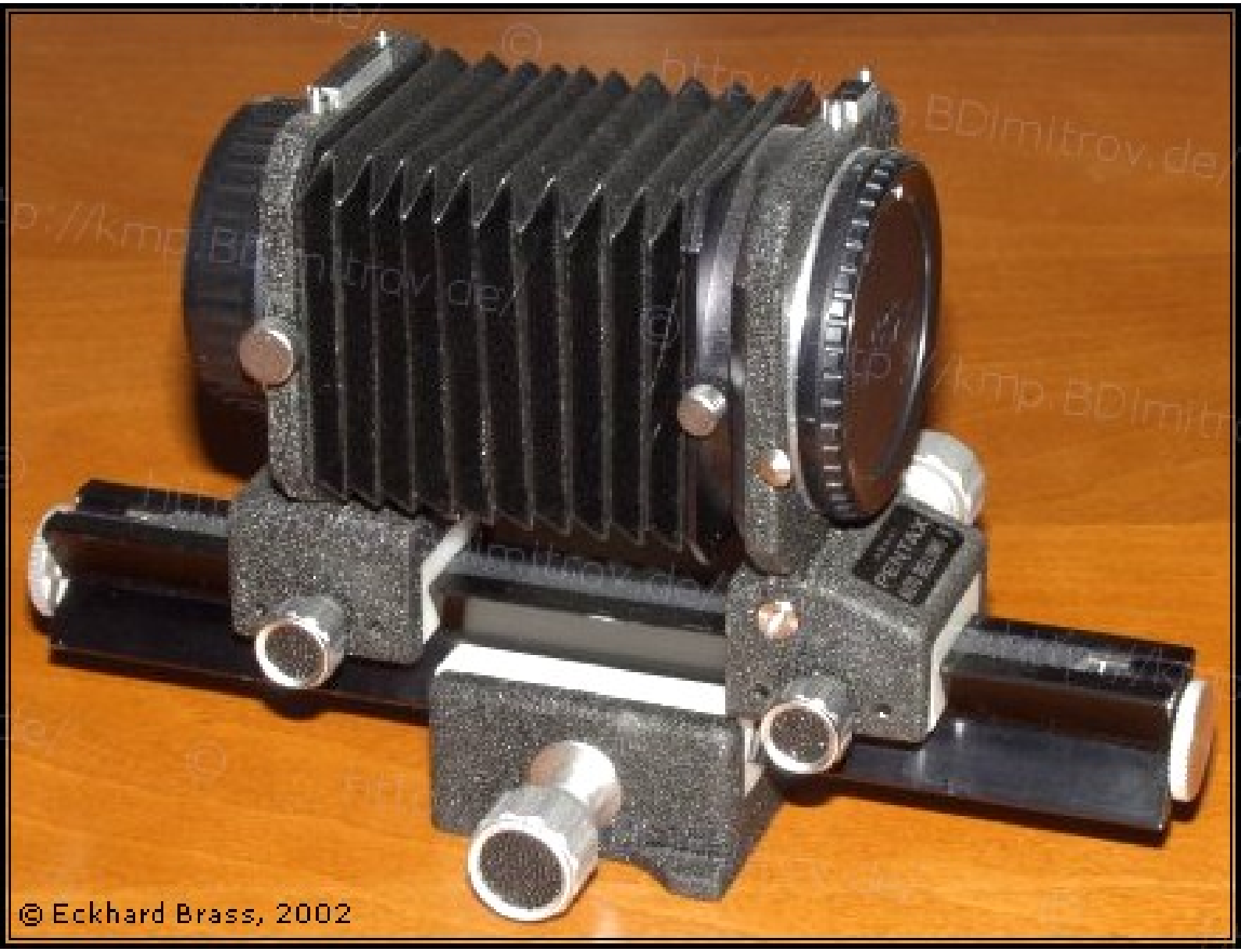
© Eckhard Brass, 2002

PENTAX
SMC PENTAX AF ZOOM 1:2.8 35
ASAHI OPT. CO.
7764012
AUTO FOCUS
OFF ON

© Bojidar Dimitrov, 2002
PENTAX
MX super

PENTAX

PENTAX CLASSIC AND MODERN CAMERA REPAIR SPECIALIST 100%
SATISFACTION GUARANTEED ..PENTAX TRAINED TECHNICIANS
www.asahiphoto.co.uk
Tel 020 8908 2931

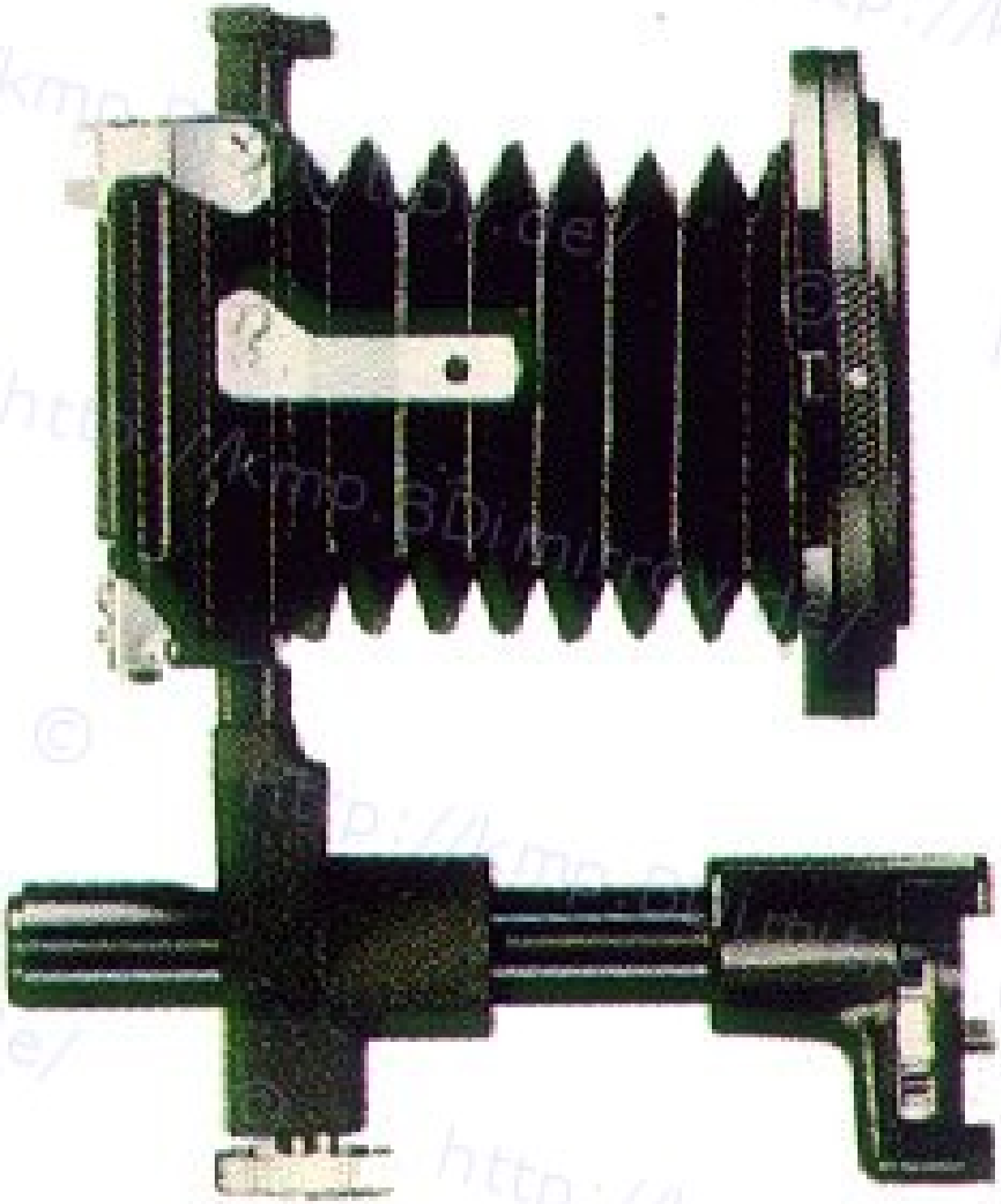

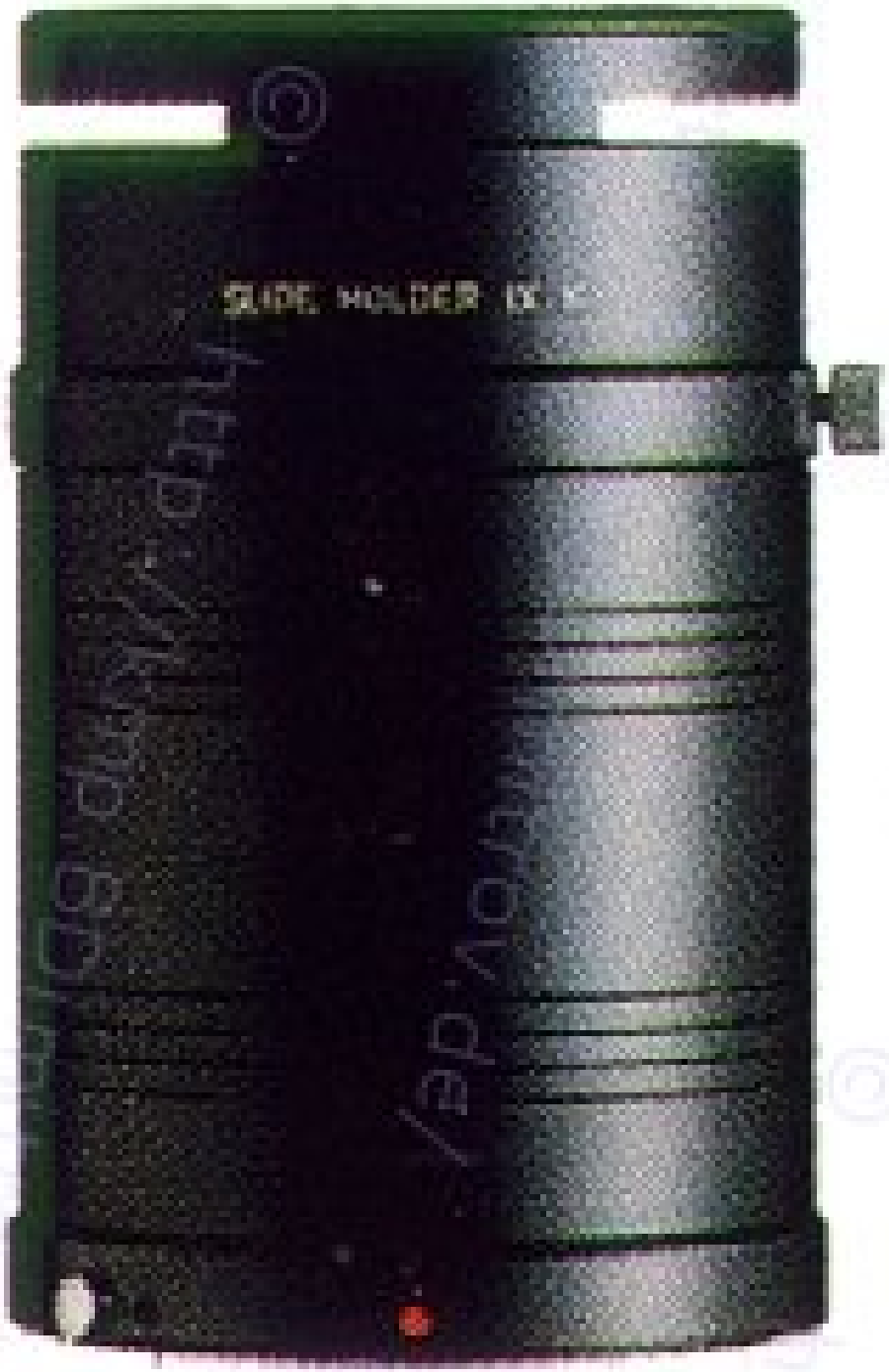
SLIDE HOLDER EX

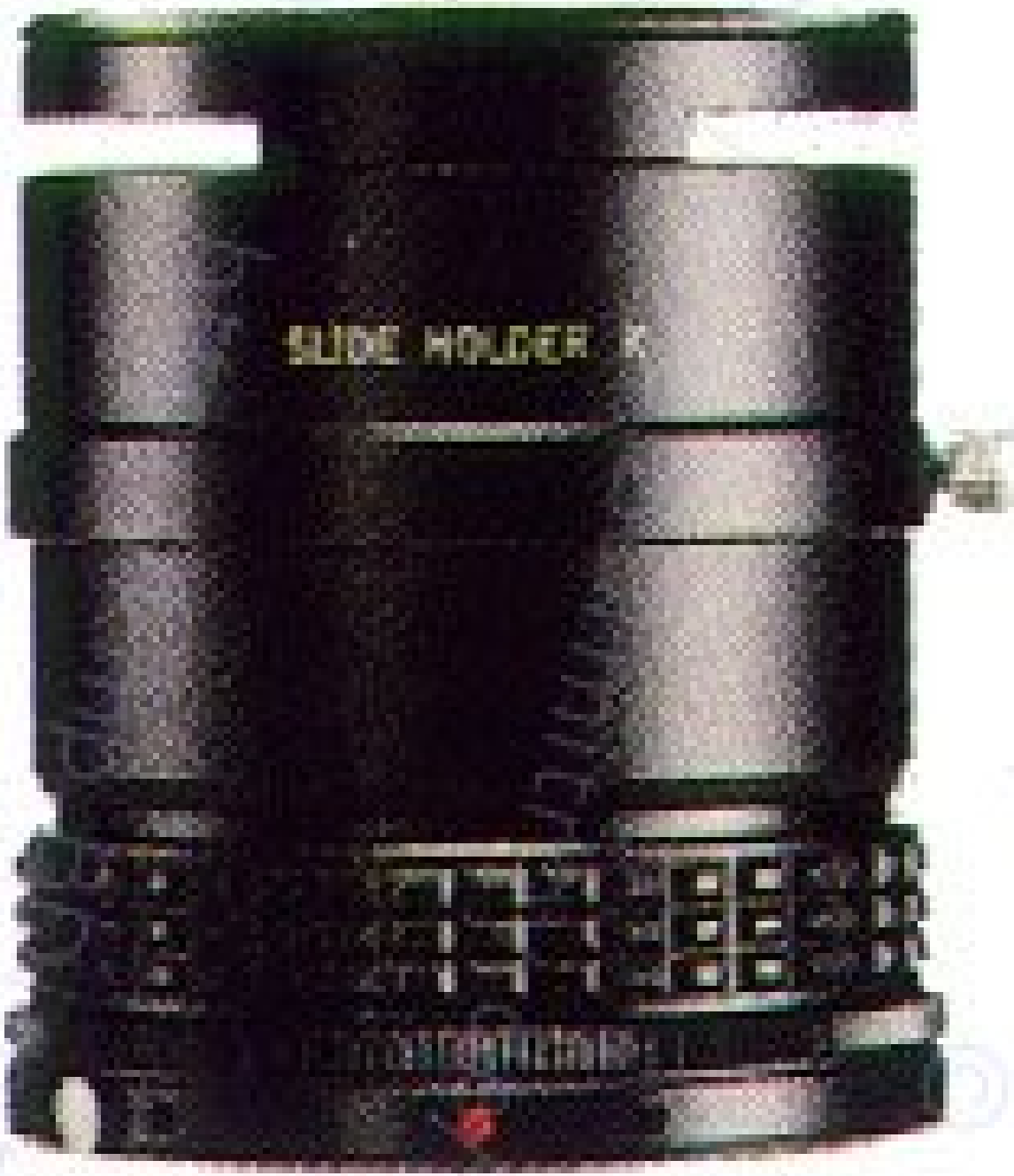
SLIDE HOLDER K

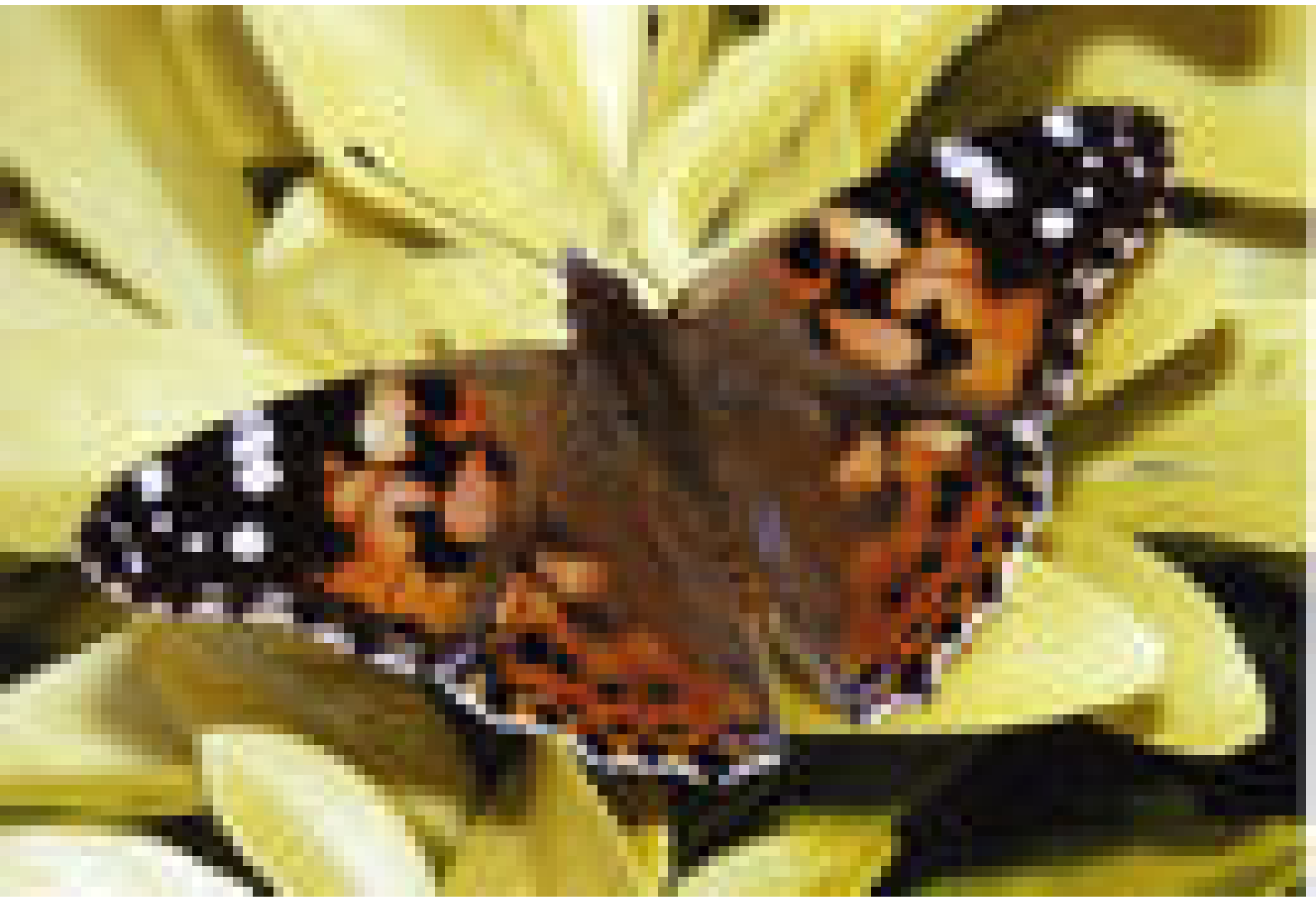

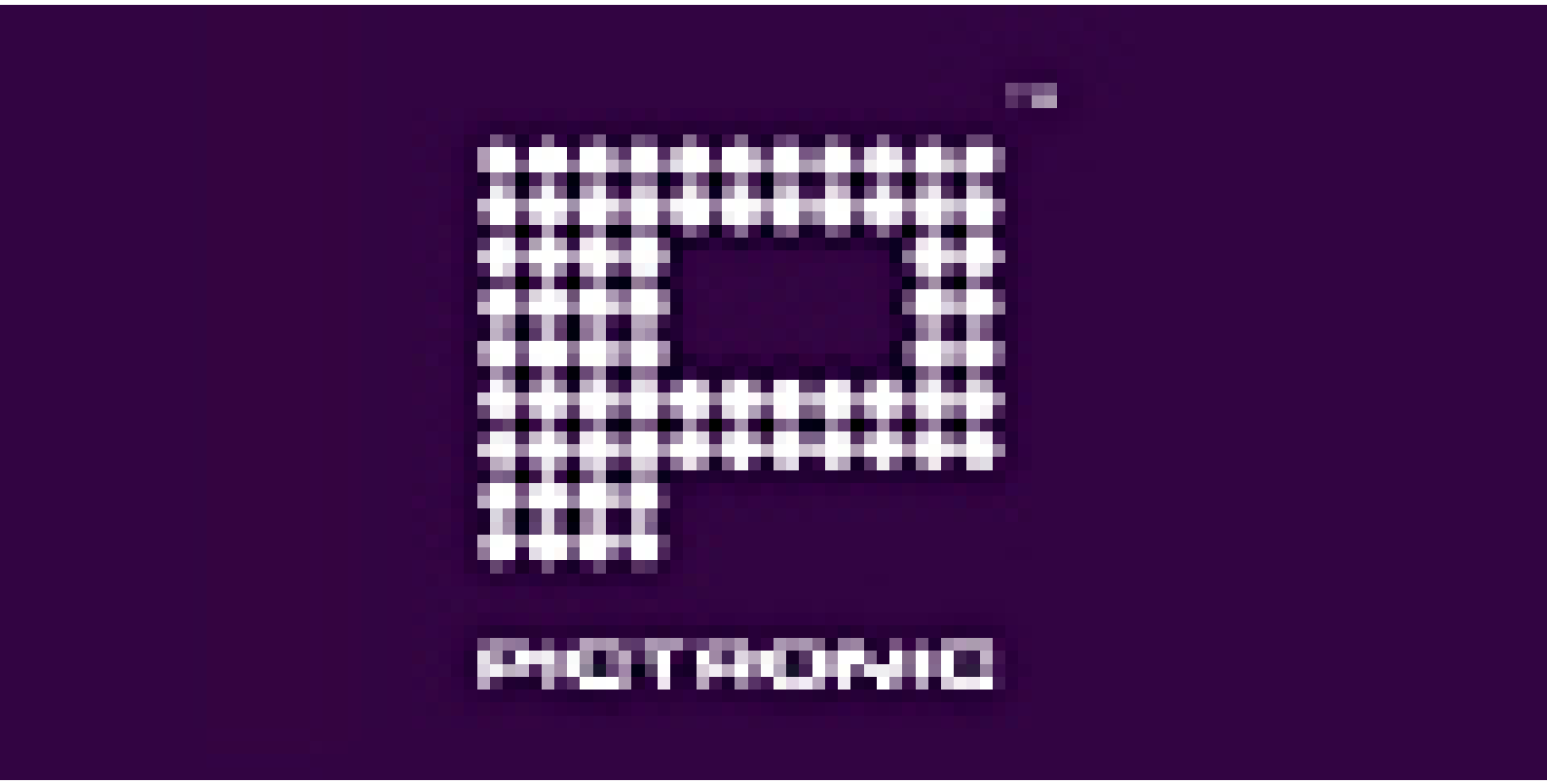
PATRONID

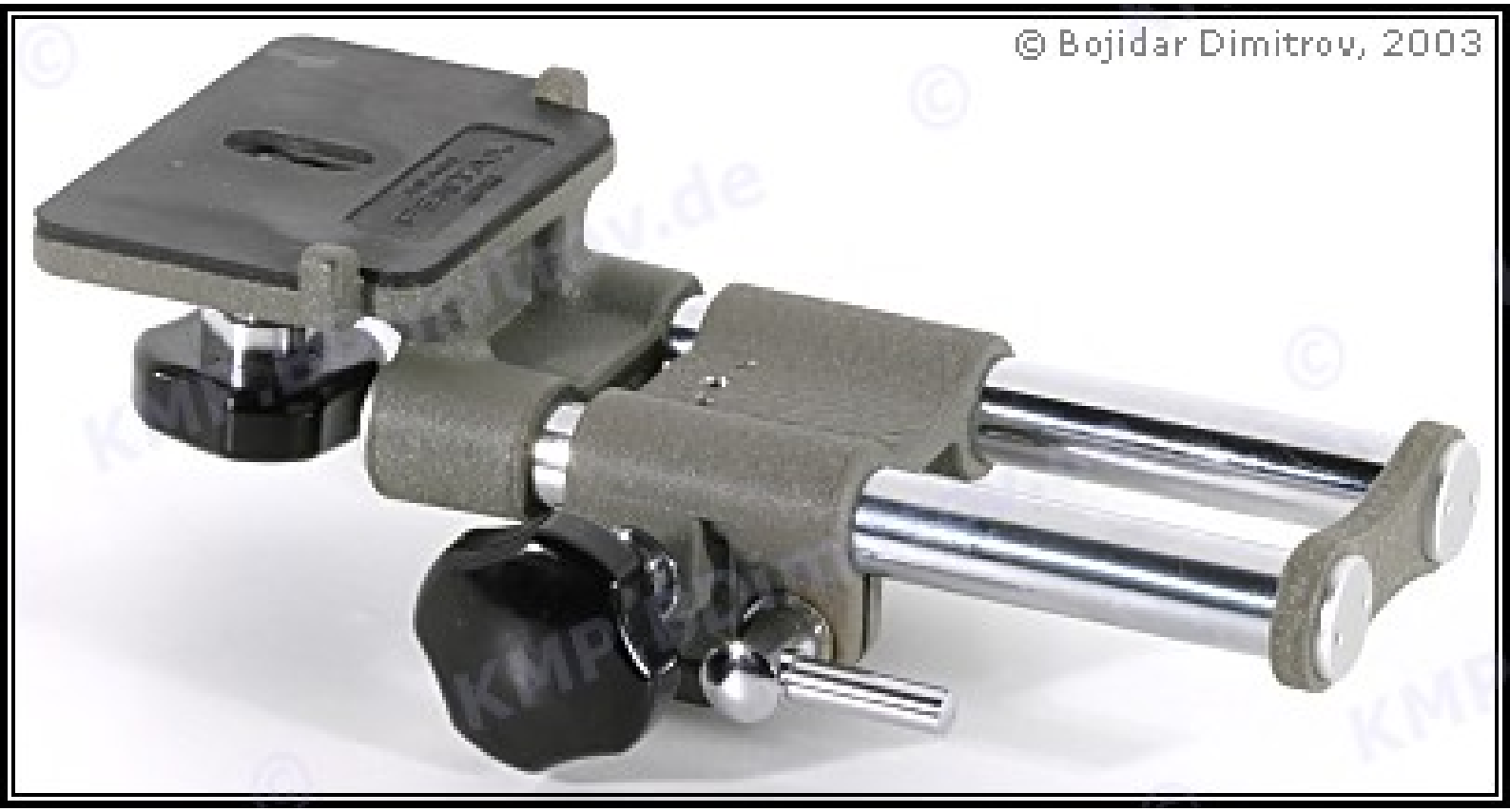
© Bojidar Dimitrov, 2003

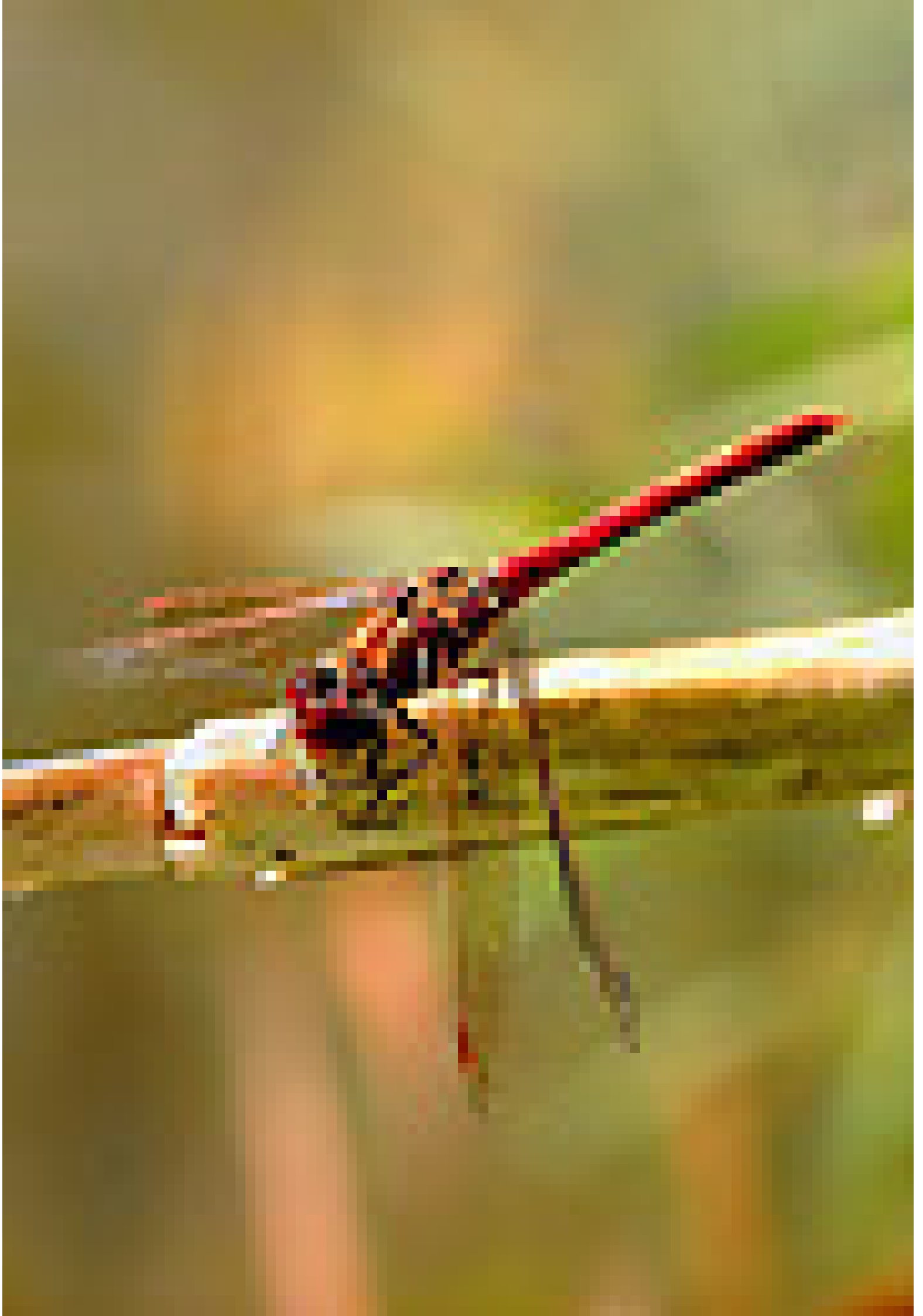

PENTAX
JAPAN
© Bojidar Dimitrov, 2003

Reverse Ring
Light Holder K
JAPAN
PENTAX
FP
K

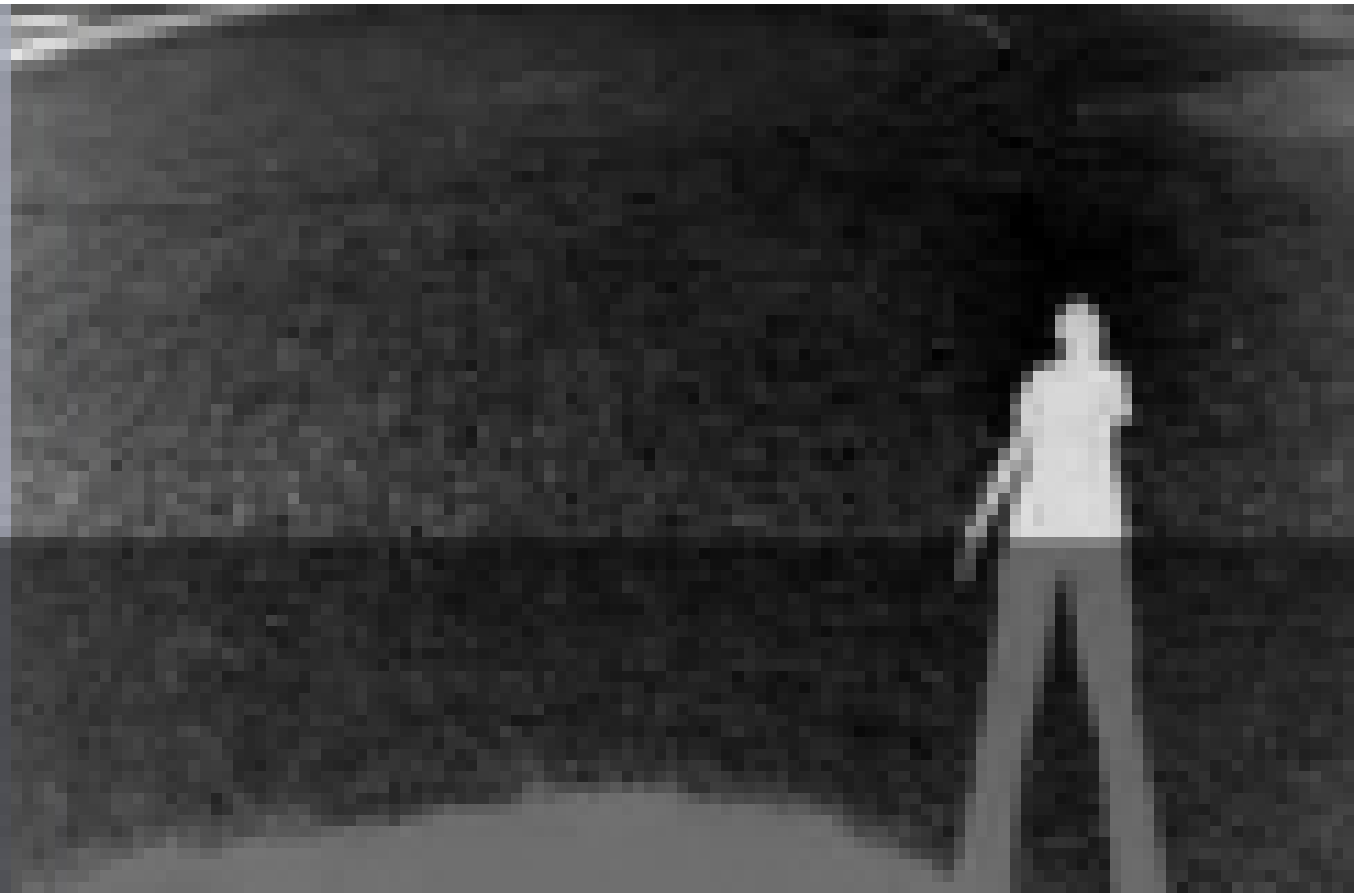

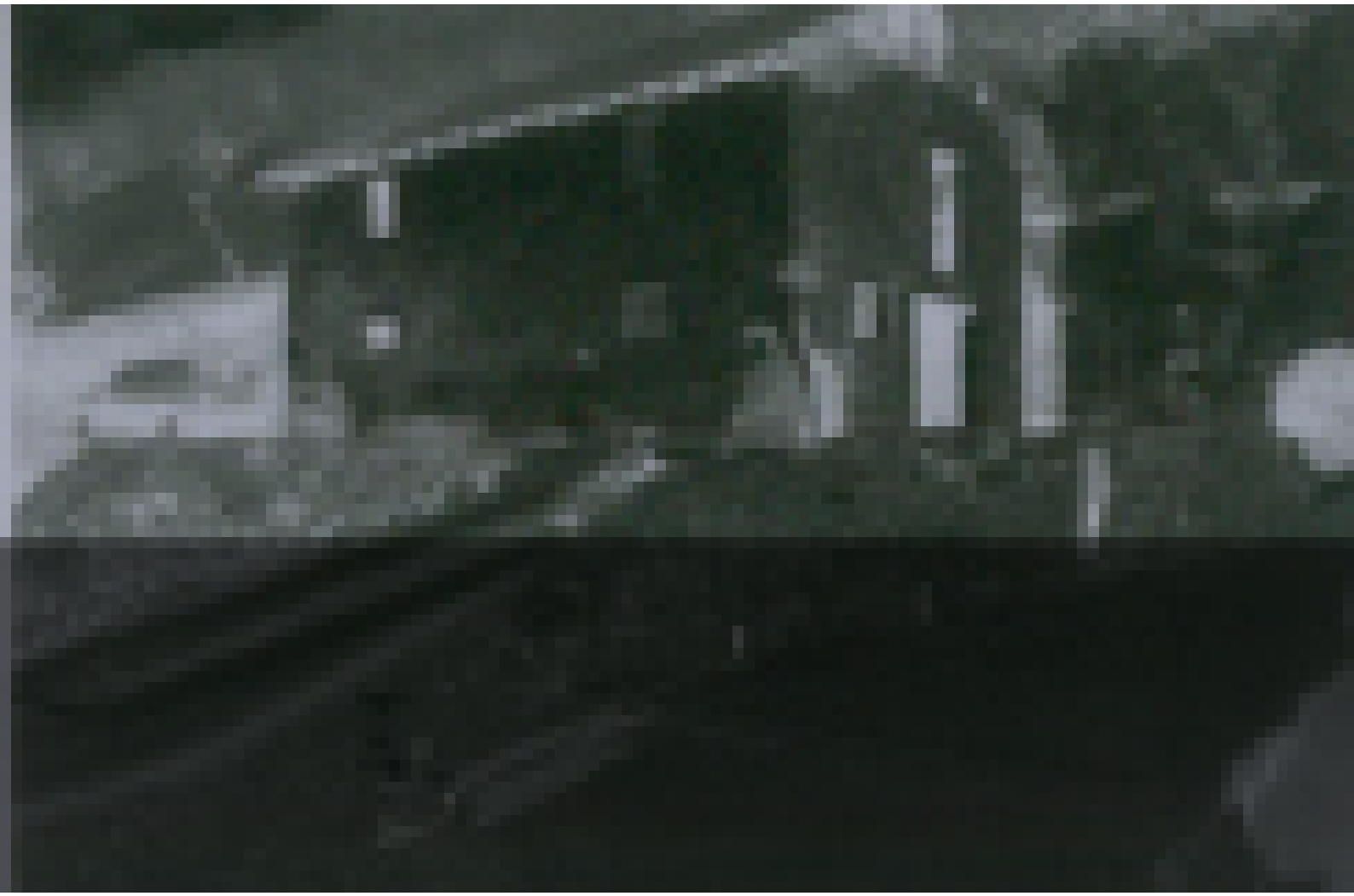

PENTAXiste.org le site des amateurs de PENTAX

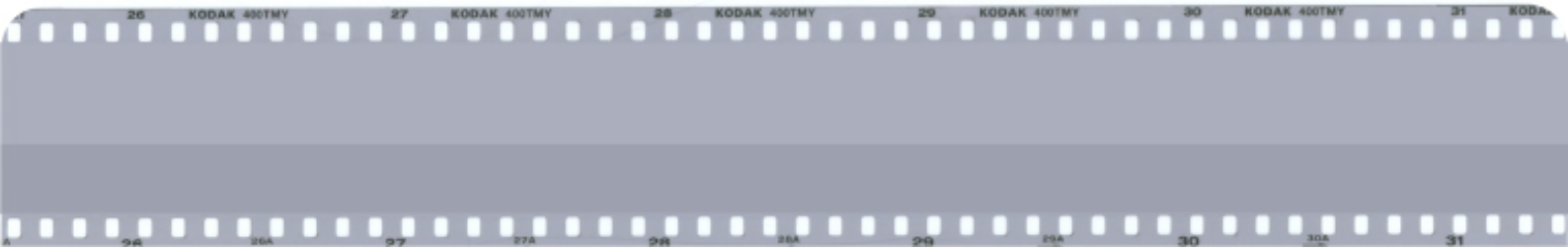

MARK
ROBERTS

PENTAX

PENTAX

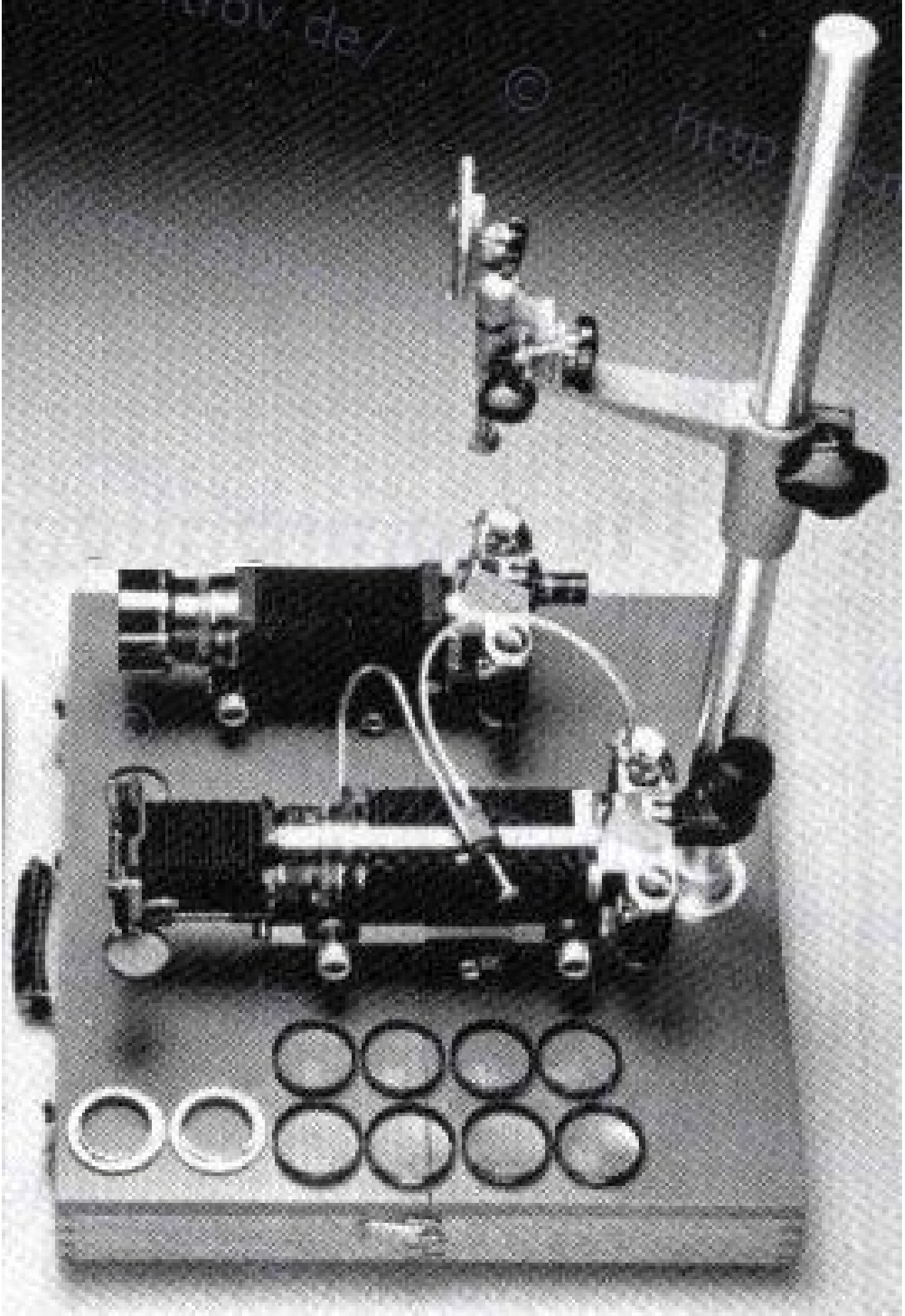

PENTAX
PENTAX

PENTAX
PENTAX

ELECTRO
SPOTMATIC
ASAHI
PENTAX

SPOTMATIC
ASAHI
PENTAX
PENTAX

KONICA

SPOTMATIC
HONEYWELL
PENTAX
HONEYWELL
PENTAX

ASAHI
PENTAX

HEILAND
PENTAX
HEILAND
PENTAX

PENTAX
MZ-S

SPOTMATIC
ASAHI
PENTAX
ASAHI
PENTAX

PENTAX
LX

PENTAX

ASAHI
PENTAX

Canon
CANON INC.
CANON LENS

ELECTRO
SPOTMATIC
ASAHI
PENTAX

R.H.CLARE.
ASAHI
PENTAX
Asahi
Na161860
f=55mm

© Bojidar Dimitrov, 2002

© Bojidar Dimitrov, 2003

TIMER
60
30
90
5
120
POWER
AC
DC
ON
OFF
BATT
CHARGE
REMOTE
ON
START
PENTAX
POWER PACK N
OFF
STOP

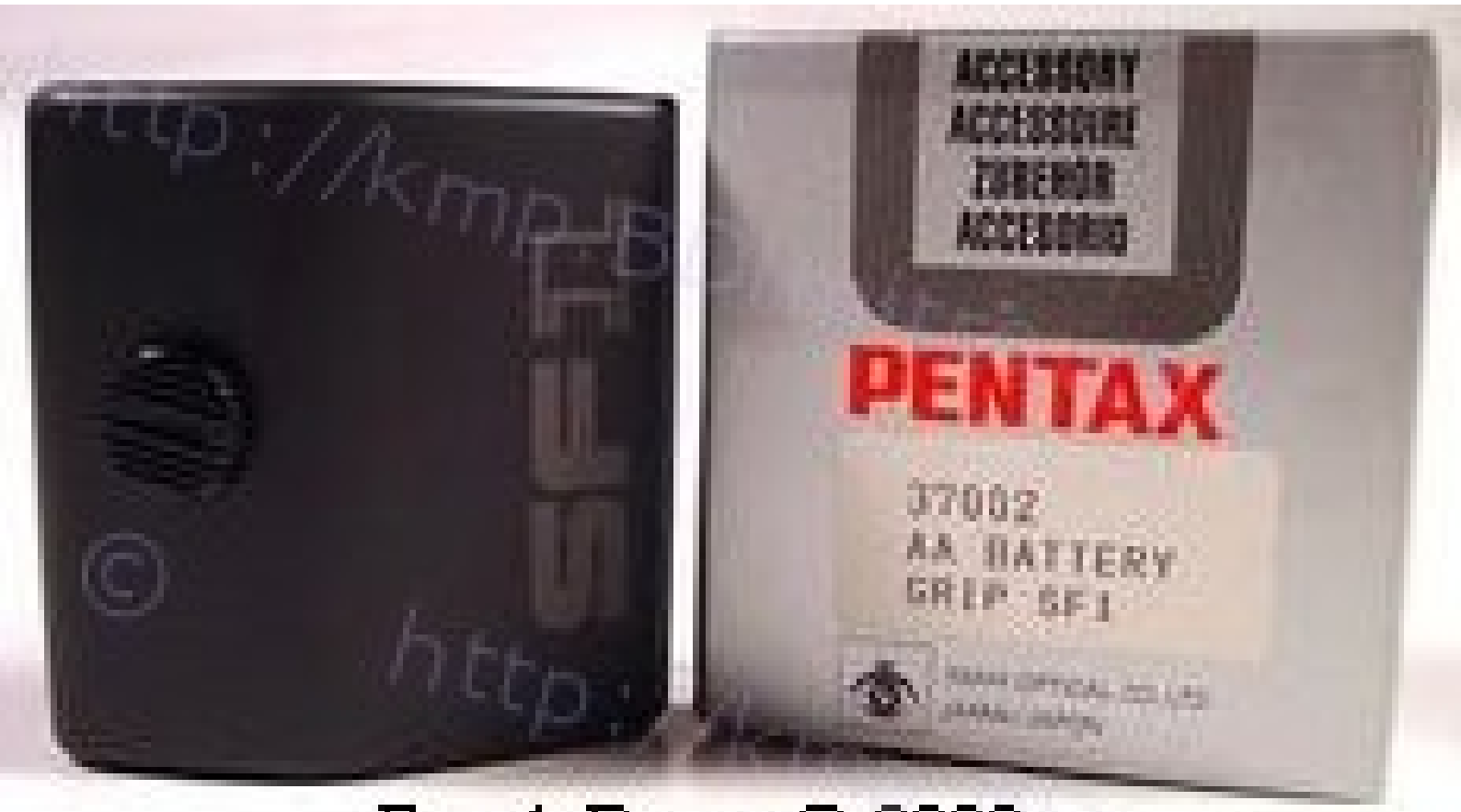

Frank Dong © 2000

© Bojidar Dimitrov, 2002

PENTAX

© Bojidar Dimitrov, 2002

http://kmp.BDimitrov.de/

PENTAX

© Bojidar Dimitrov, 2002

© Bojidar Dimitrov, 2002

© Eckhard Braß, 2002

© Eckhard Braß, 2002
PENTAX
LX

© Bojidar Dimitrov, 2003

© Bojidar Dimitrov, 2002

© Andrew Hurst, 2003

© Eckhard Braß, 2002

© Bojidar Dimitrov, 2002

PENTAX
OFF
WINDER IL-X
ASAHI OPT. CO., JAPAN

© Bojidar Dimitrov, 2003

© Bojidar Dimitrov, 2003

© Bojidar Dimitrov, 2002
http://kmp.BDimitrov.de/

PENTAX
*istD
SMC PENTAX-DA 1:3.5-5.6 18-55mm AL
ø52mm
MF
AF

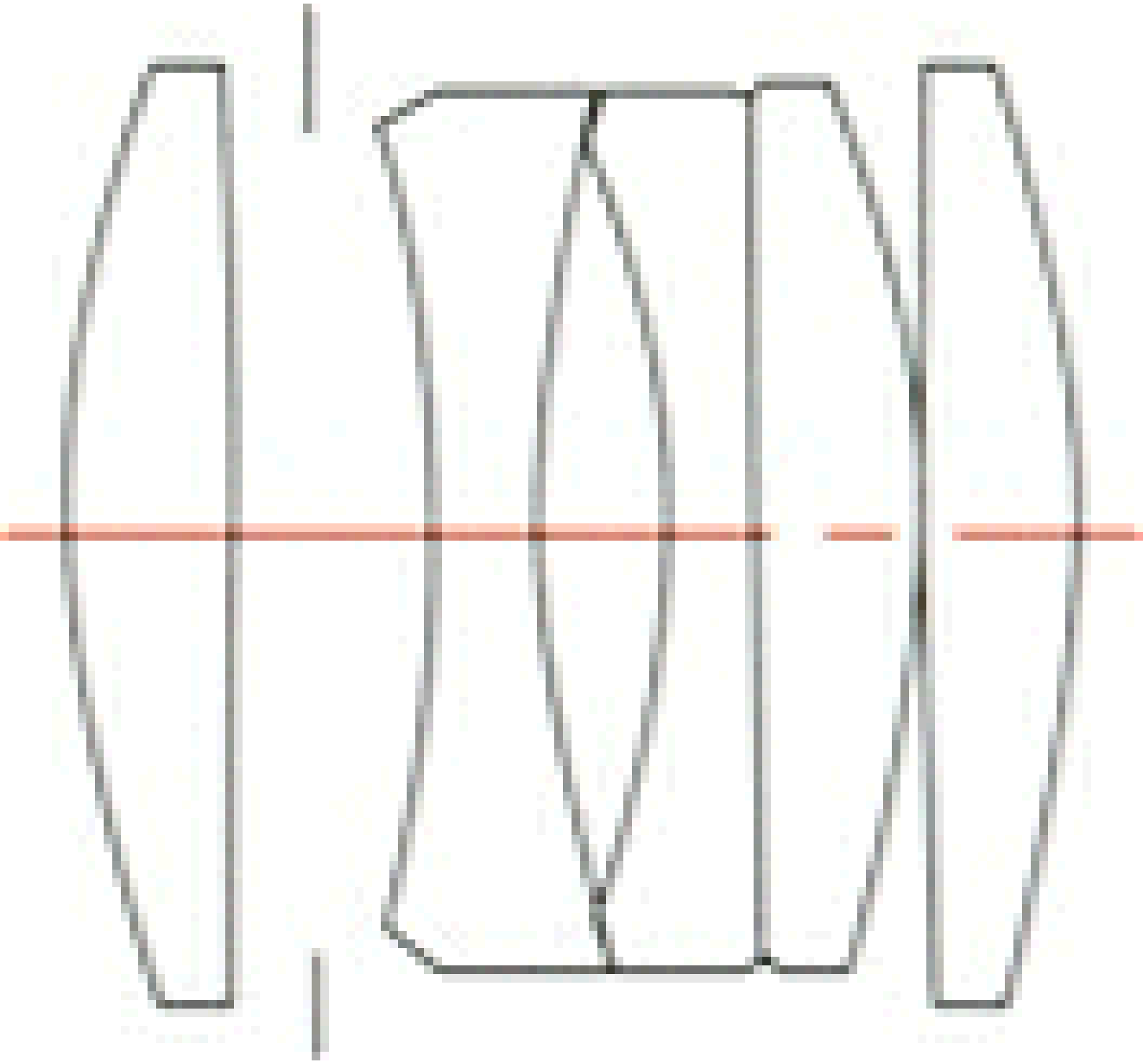

PENTAX
SMC PENTAX-DA 1:3.5-5.6 18-55mm AL
ø52mm

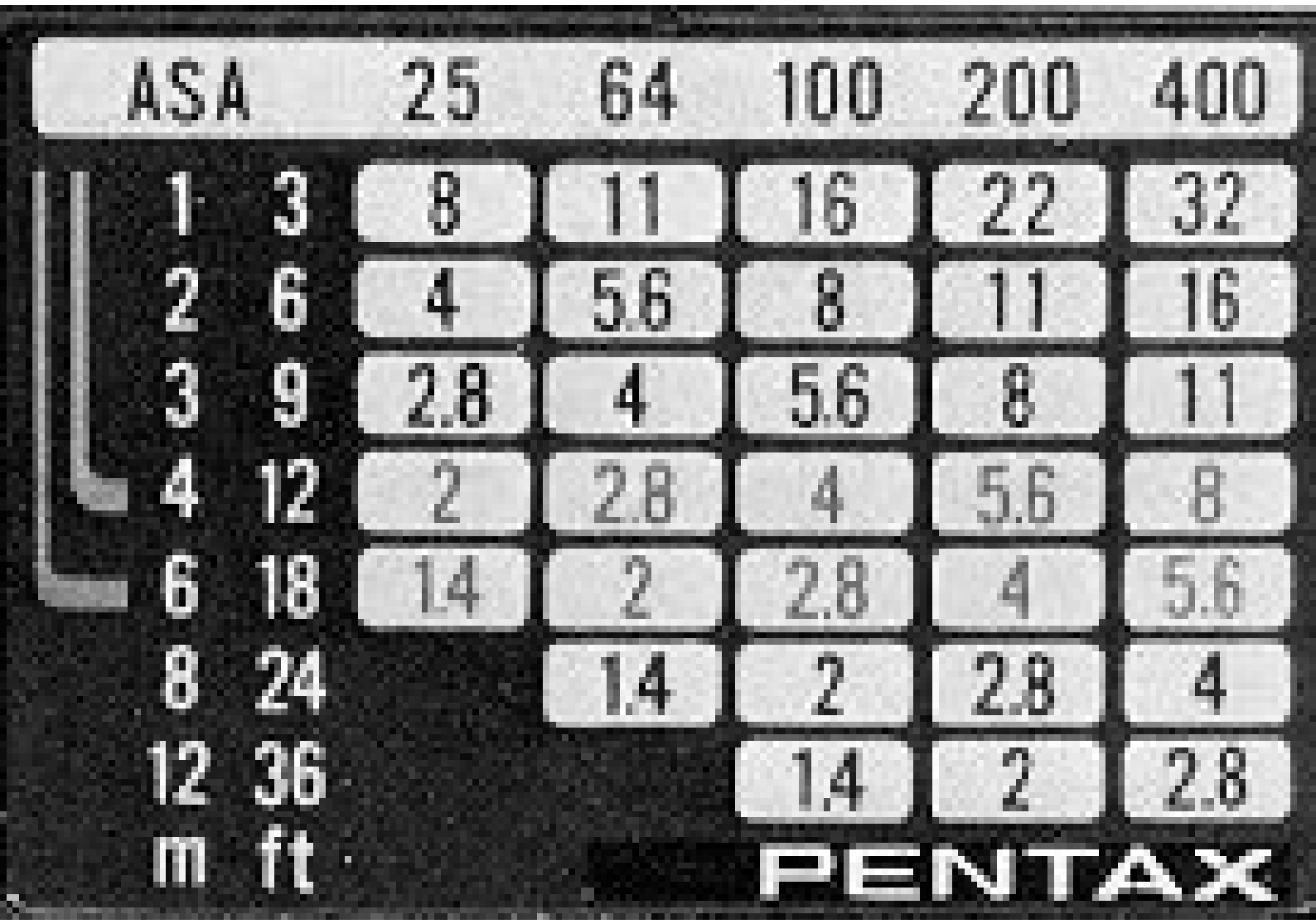
ASA 25 64 100 200 400
1 3 8 11 16 22 32
2 6 4 5.6 8 11 16
3 9 2.8 4 5.6 8 11
4 12 2 2.8 4 5.6 8
6 18 1.4 2 2.8 4 5.6
8 24 1.4 2 2.8 4
12 36 1.4 2 2.8
m ft
PENTAX

error warning!
error!

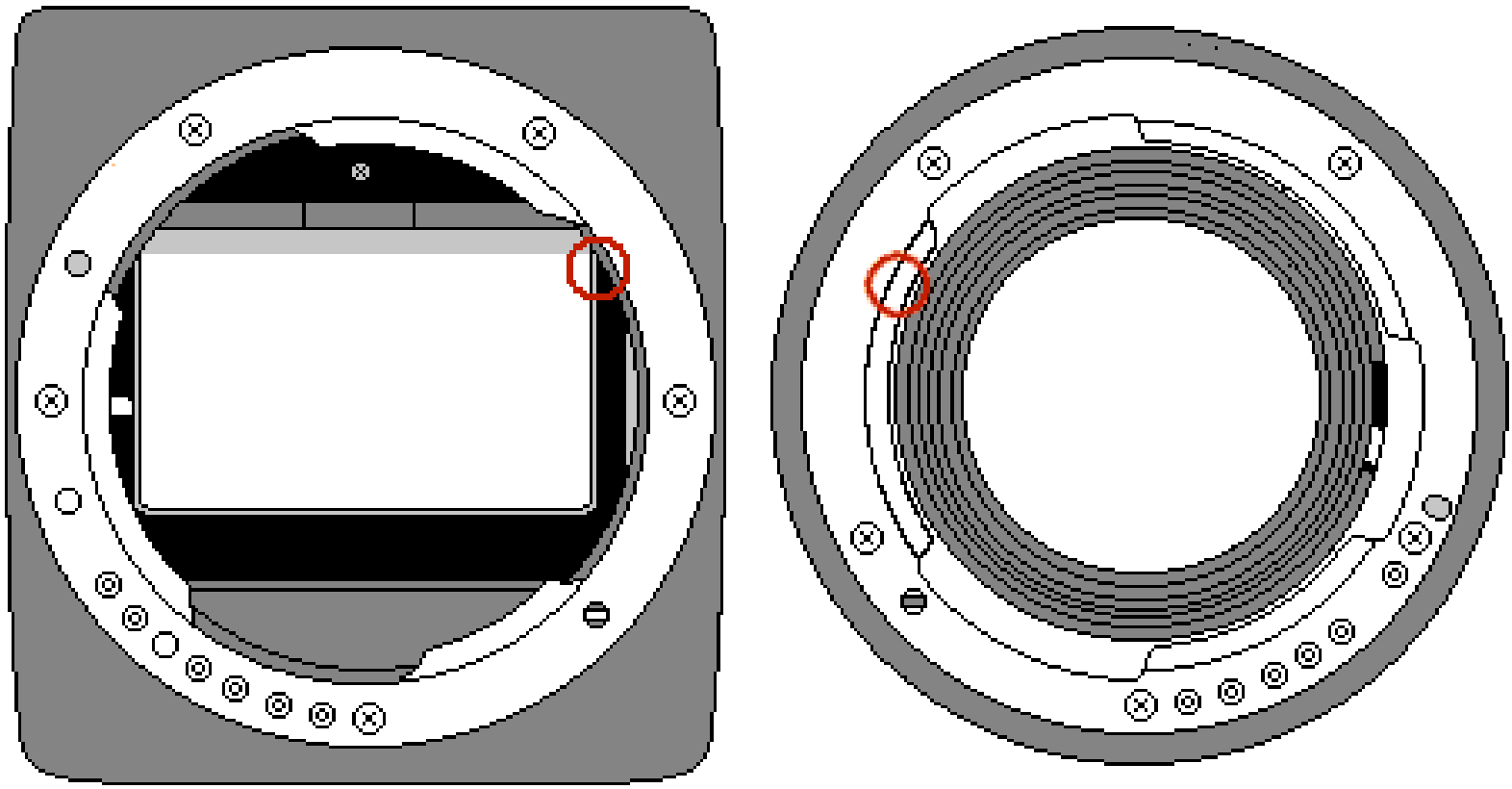

© Dario Bonazza, 1999

© Bojidar Dimitrov, 2002

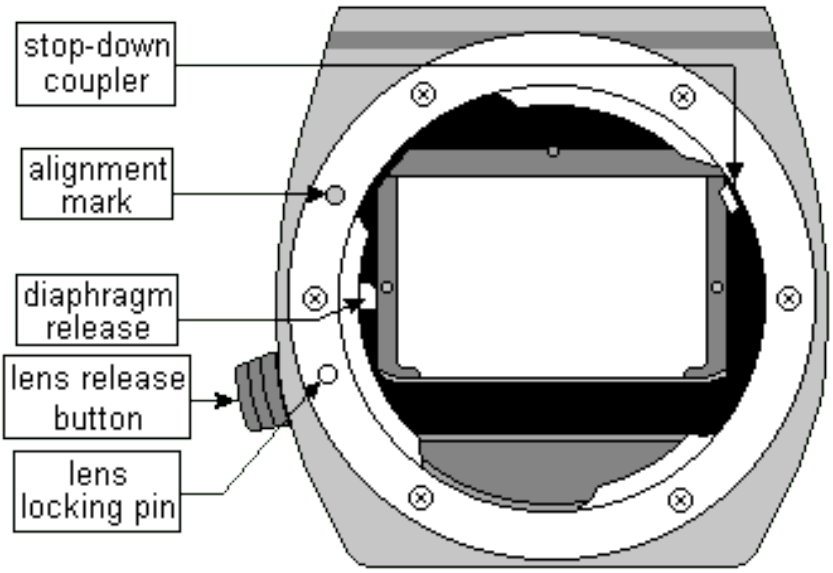

K flange

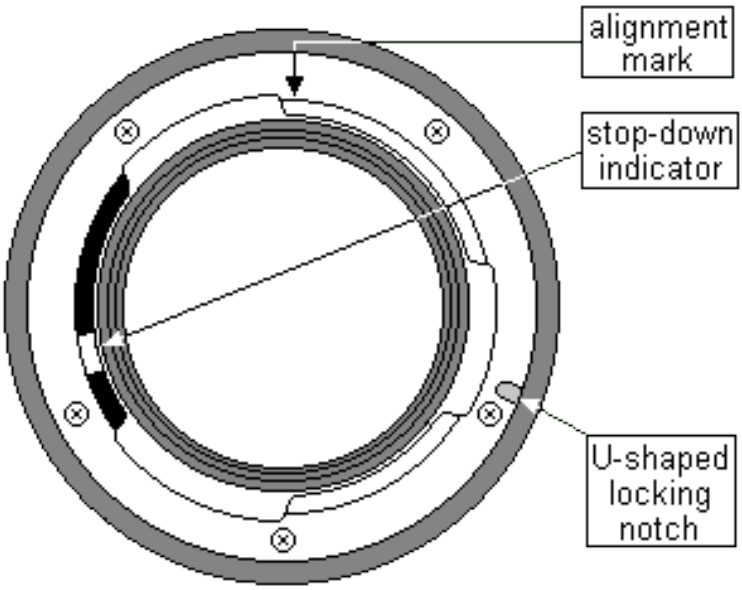

K lens (manual diaphragm)

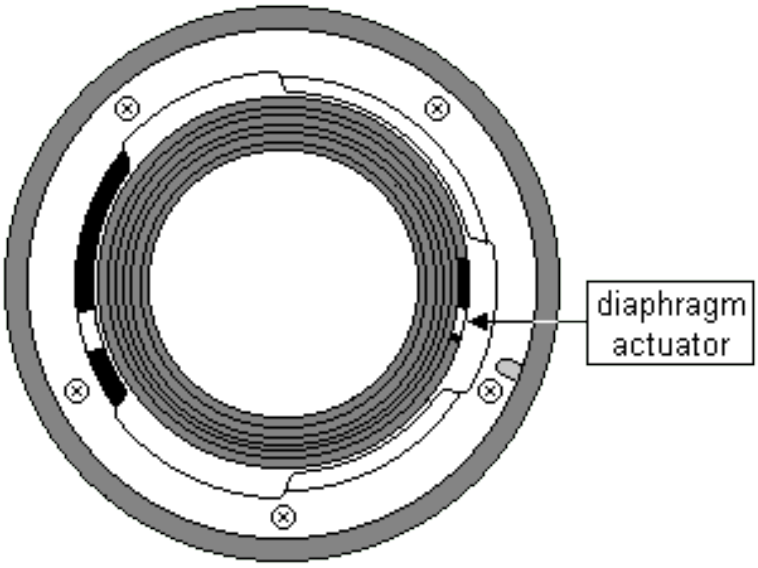

K/M lens (automatic diaphragm)
early type

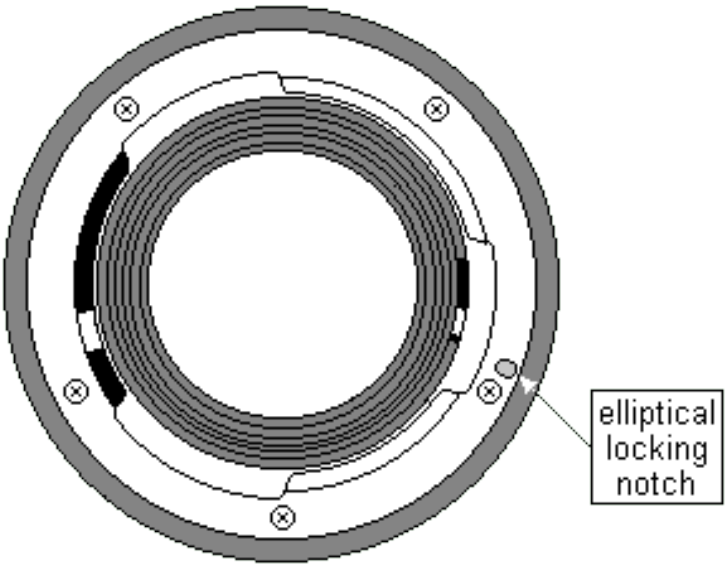

K/M lens (automatic diaphragm)
late type

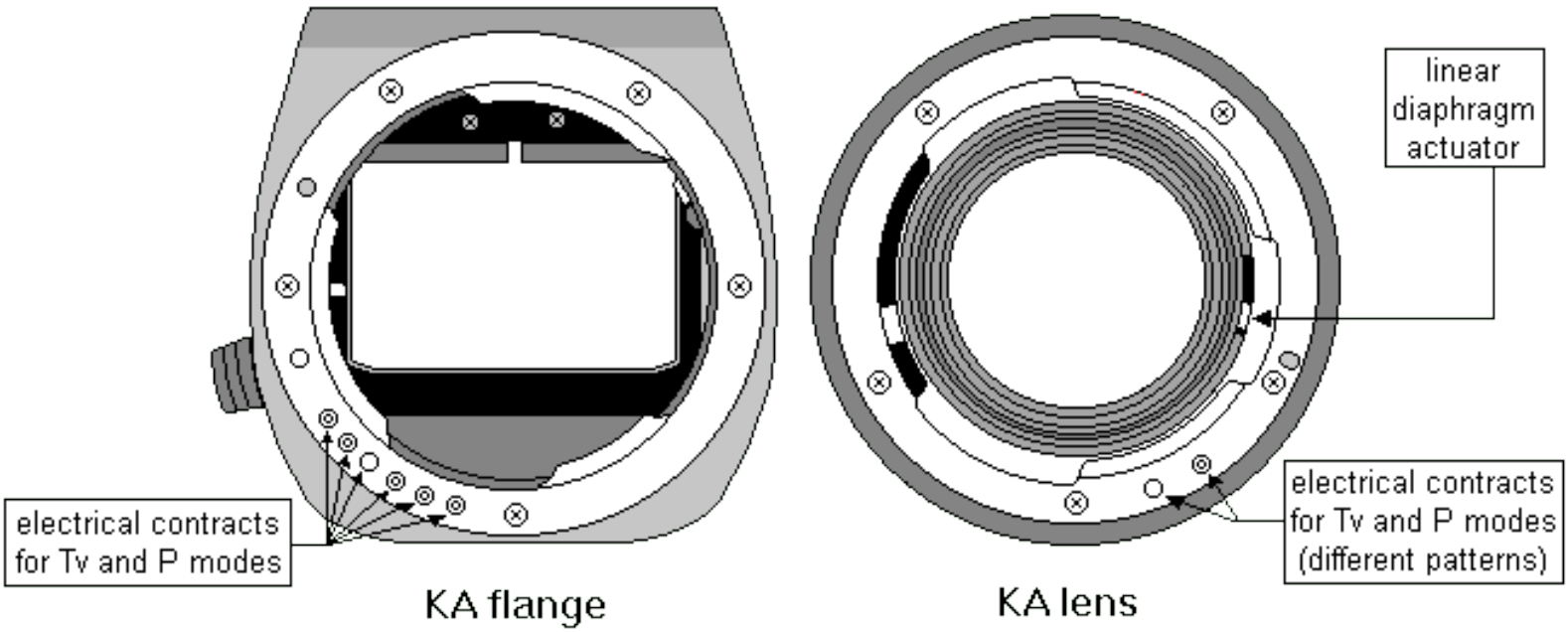
linear
diaphragm
actuator
electrical contracts
for Tv and P modes
electrical contracts
for Tv and P modes
(different patterns)
KA flange
KA lens

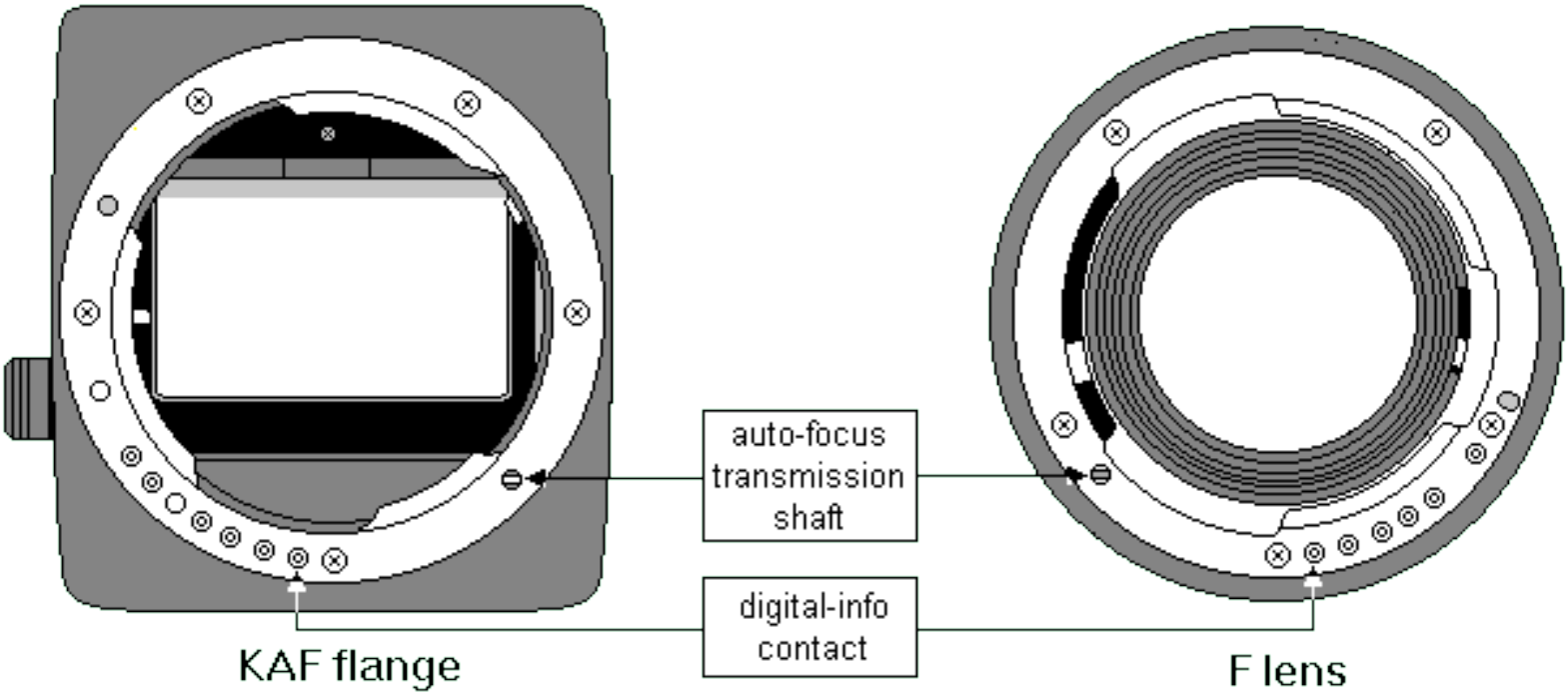
auto-focus
transmission
shaft
digital-info
contact
KAF flange
F lens

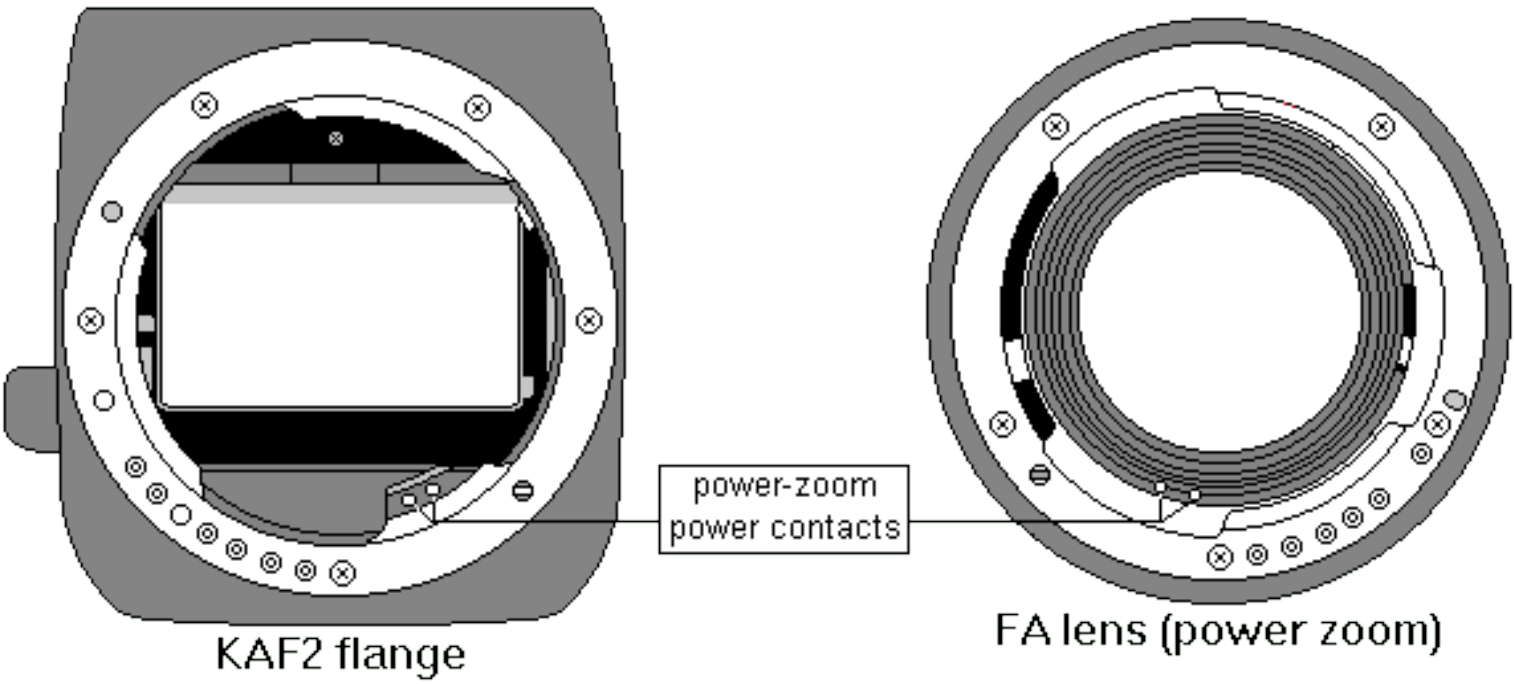
power-zoom
power contacts
KAF2 flange
FA lens (power zoom)

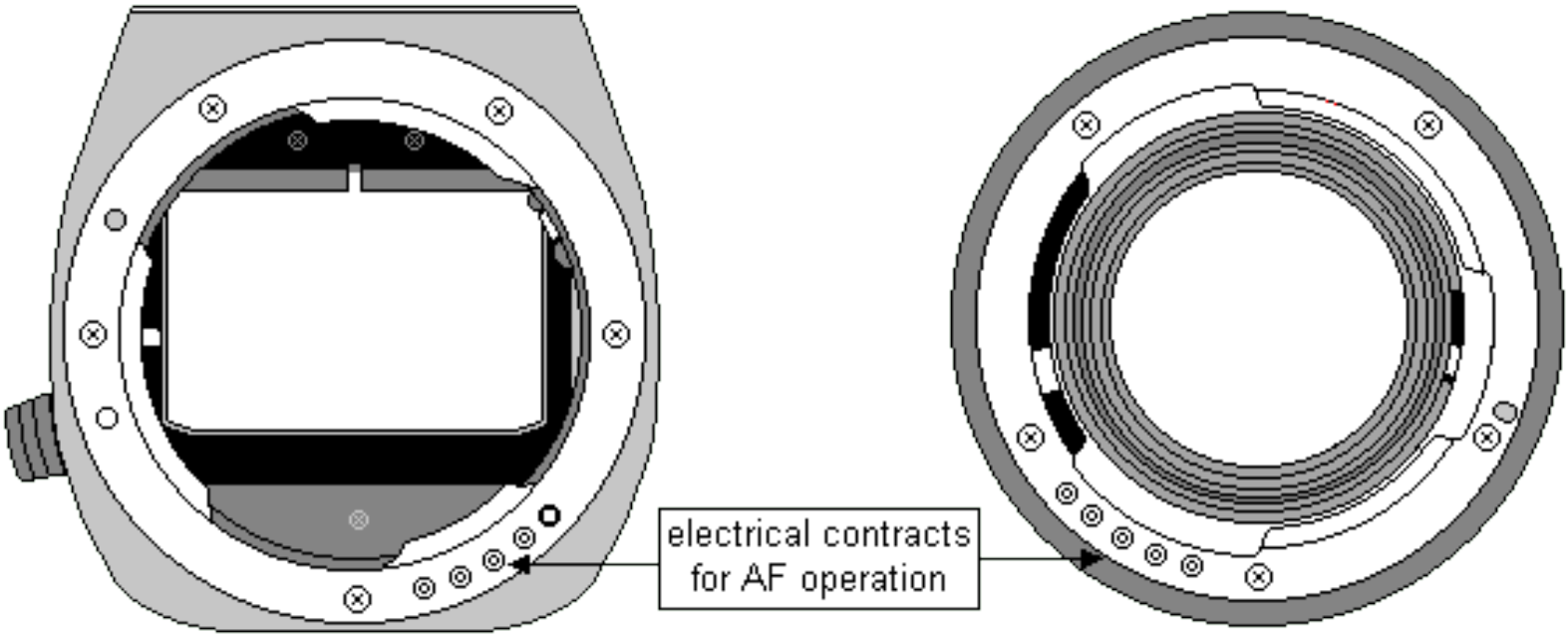

Kf flange

Kf lens

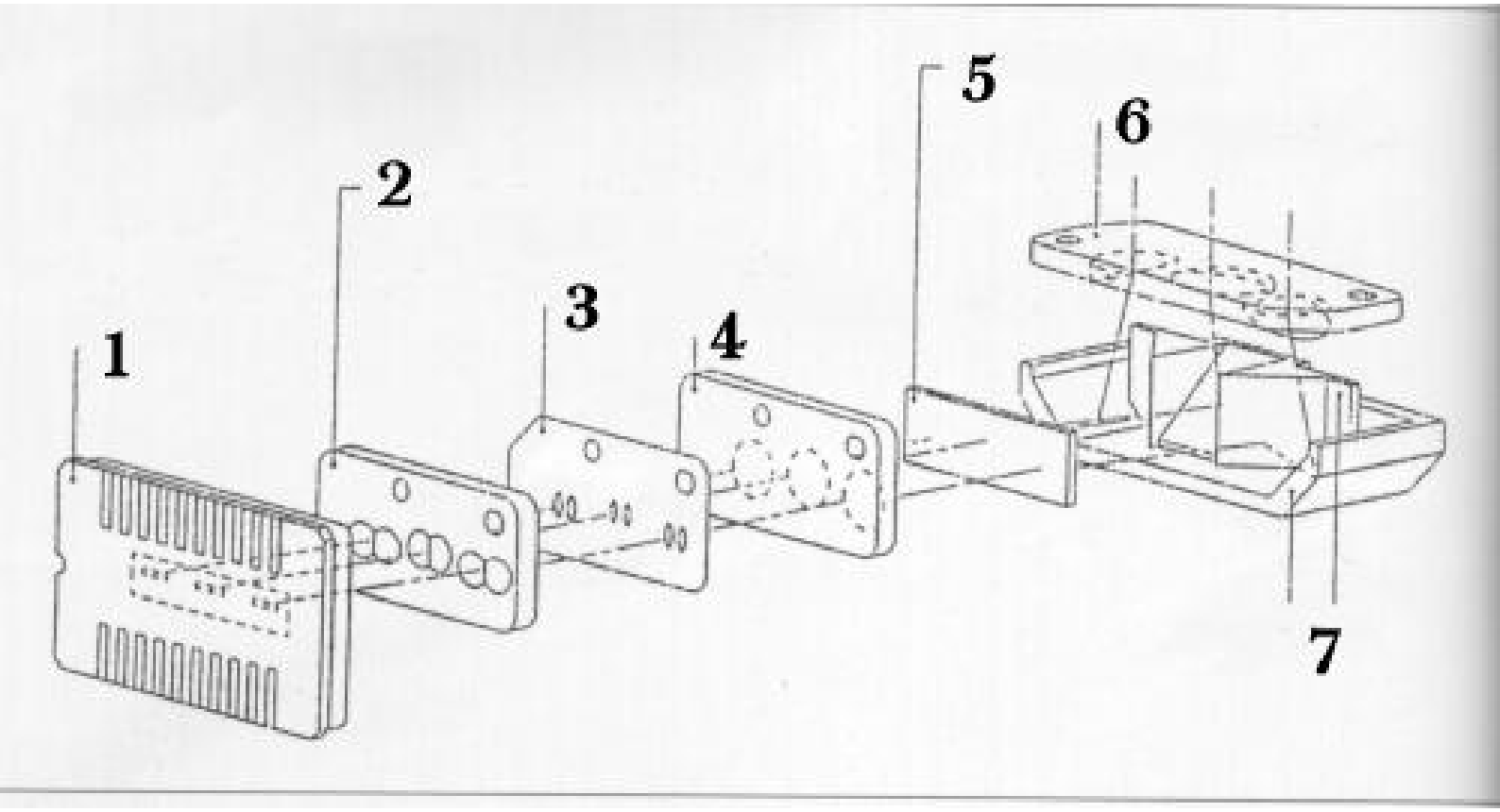
1
2
3
4
5
6
7

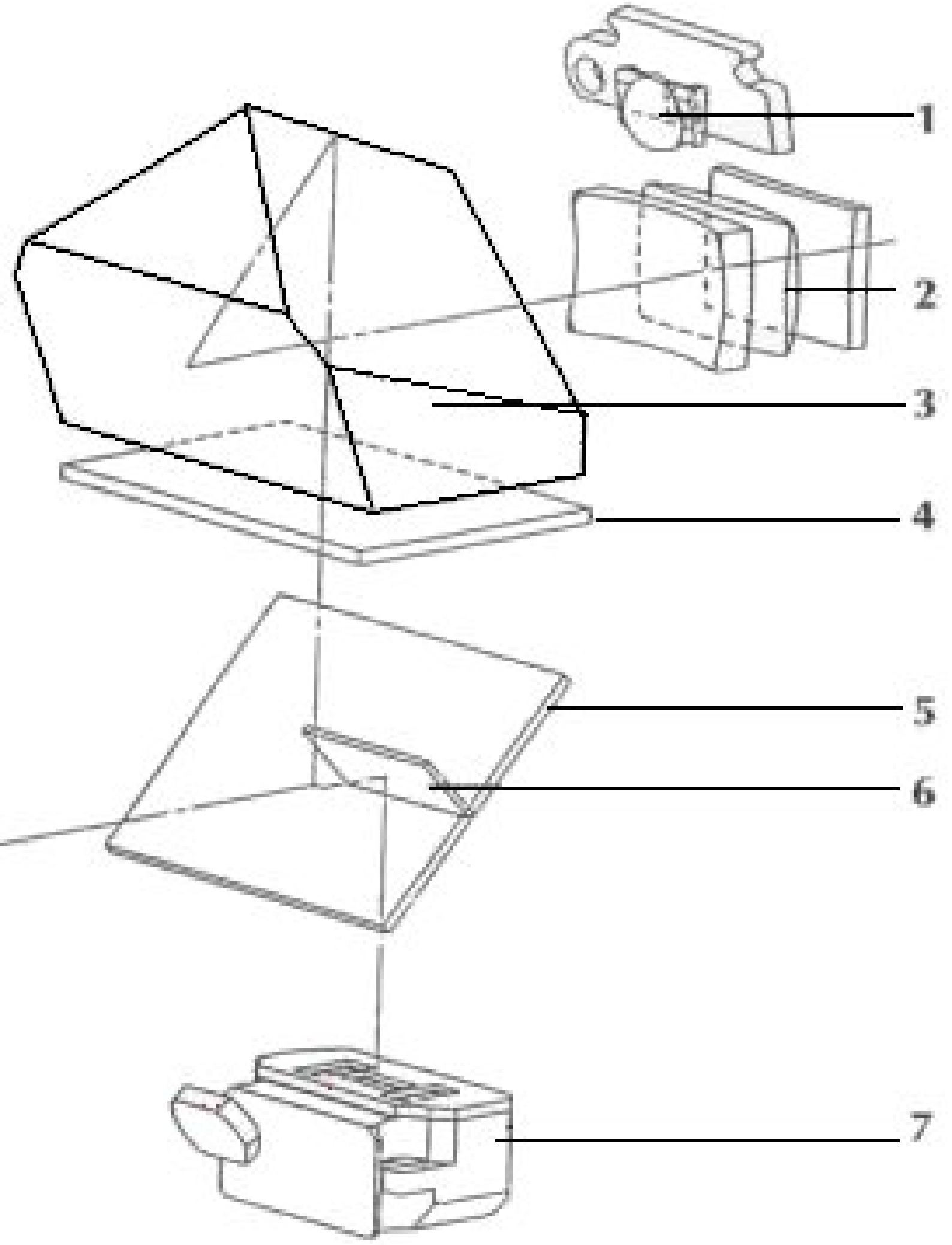
1
2
3
4
5
6
7

© Bojidar Dimtirov, 2002

© Bojidar Dimtirov, 2002

© Bojidar Dimitrov, 2002

© Bojidar Dimitrov, 2002

© Bojidar Dimtirov, 2002

© Bojidar Dimitrov, 2002

© Bojidar Dimitrov, 2002

TELE-CONVERTER MC

TAKUMAR-A 2X TELE-C

© Boris Kovacic, 2003

© Bojidar Dimitrov, 2002
PENTAX
PENTAX

© Bojidar Dimitrov, 2002
PENTAX

Gary Schloss ©2000
PENTAX
FA-1W
JAPAN

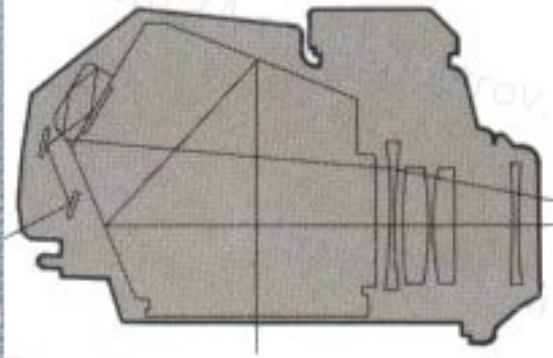

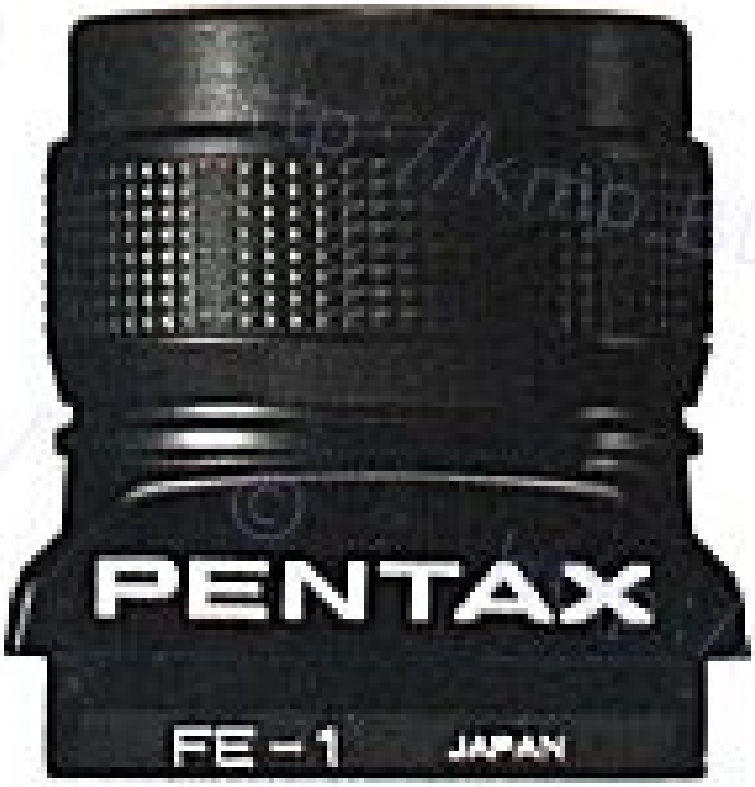
PENTAX
FE – 1
JAPAN

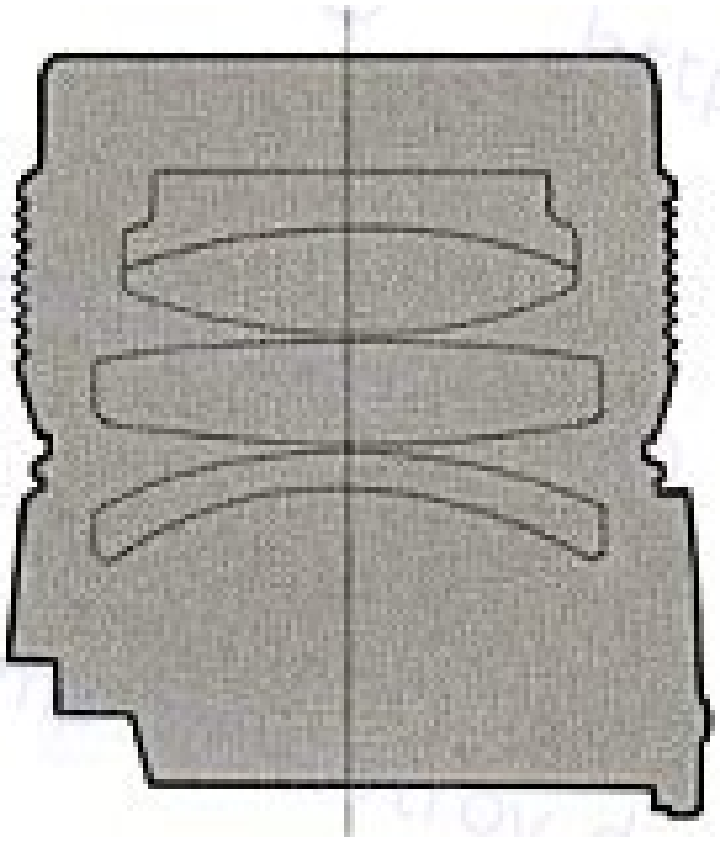

© Bojidar Dimitrov, 2002

PENTAX

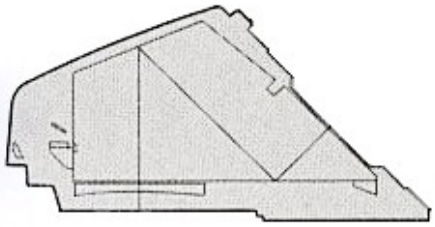

© Bojidar Dimitrov, 2002

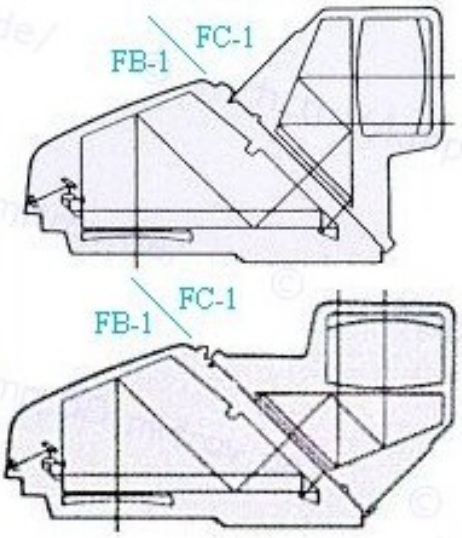

PENTAX
FD-1

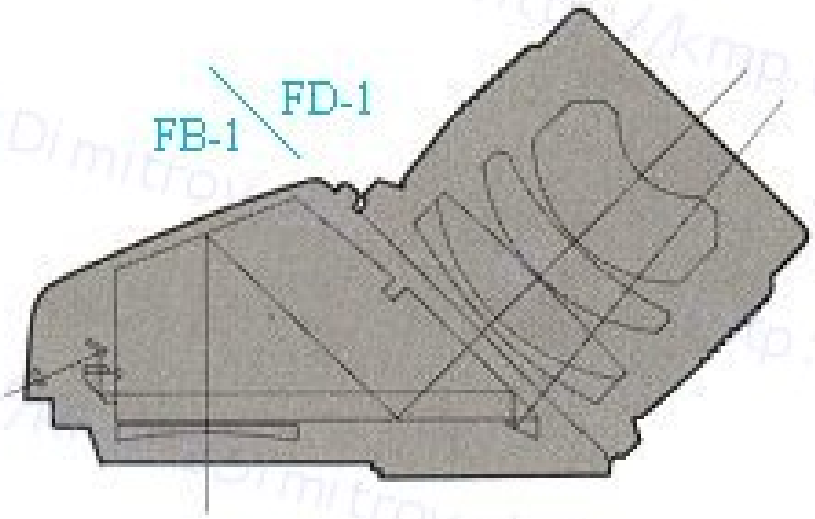
FD-1
FB-1

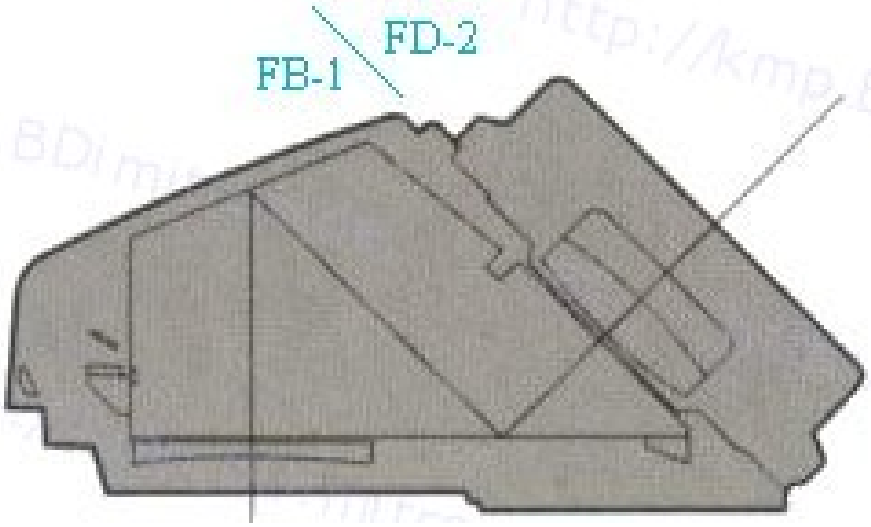
FD-2
FB-1

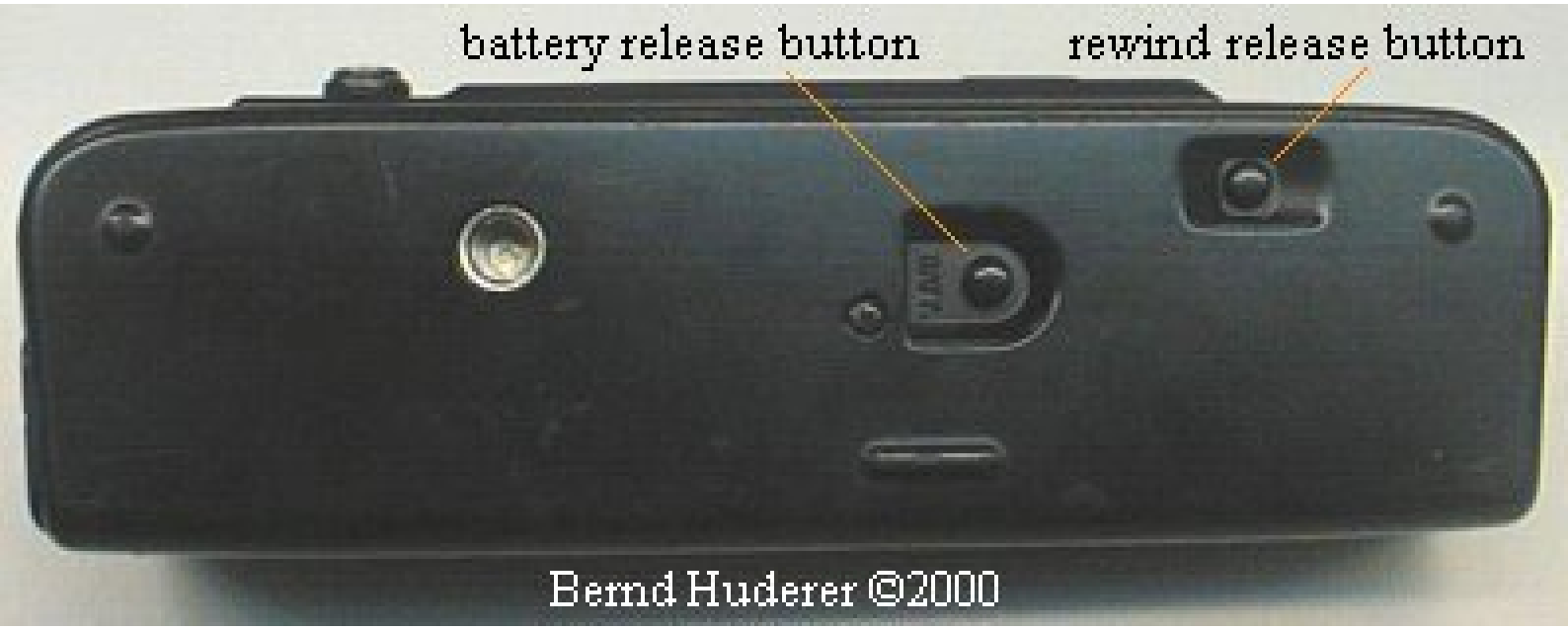
battery release button
rewind release button
Bernd Huderer ©2000

shutter release (from camera)
rewind pin (to camera)
shutter release (to camera)
WINDER ILX
ASAHI OPT. CO., JAPAN
Bernd Huderer ©2000

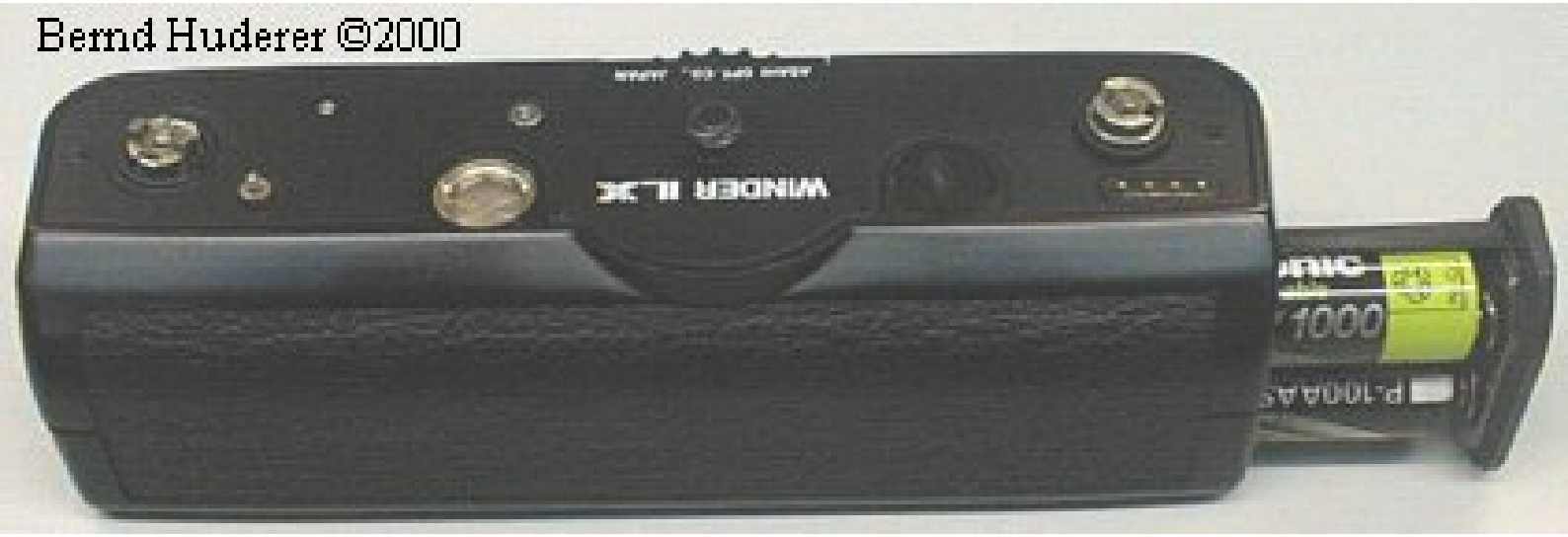
Bernd Huderer ©2000
WINDER IL3K

PENTAX
C
OFF
S
Bernd Huderer ©2000

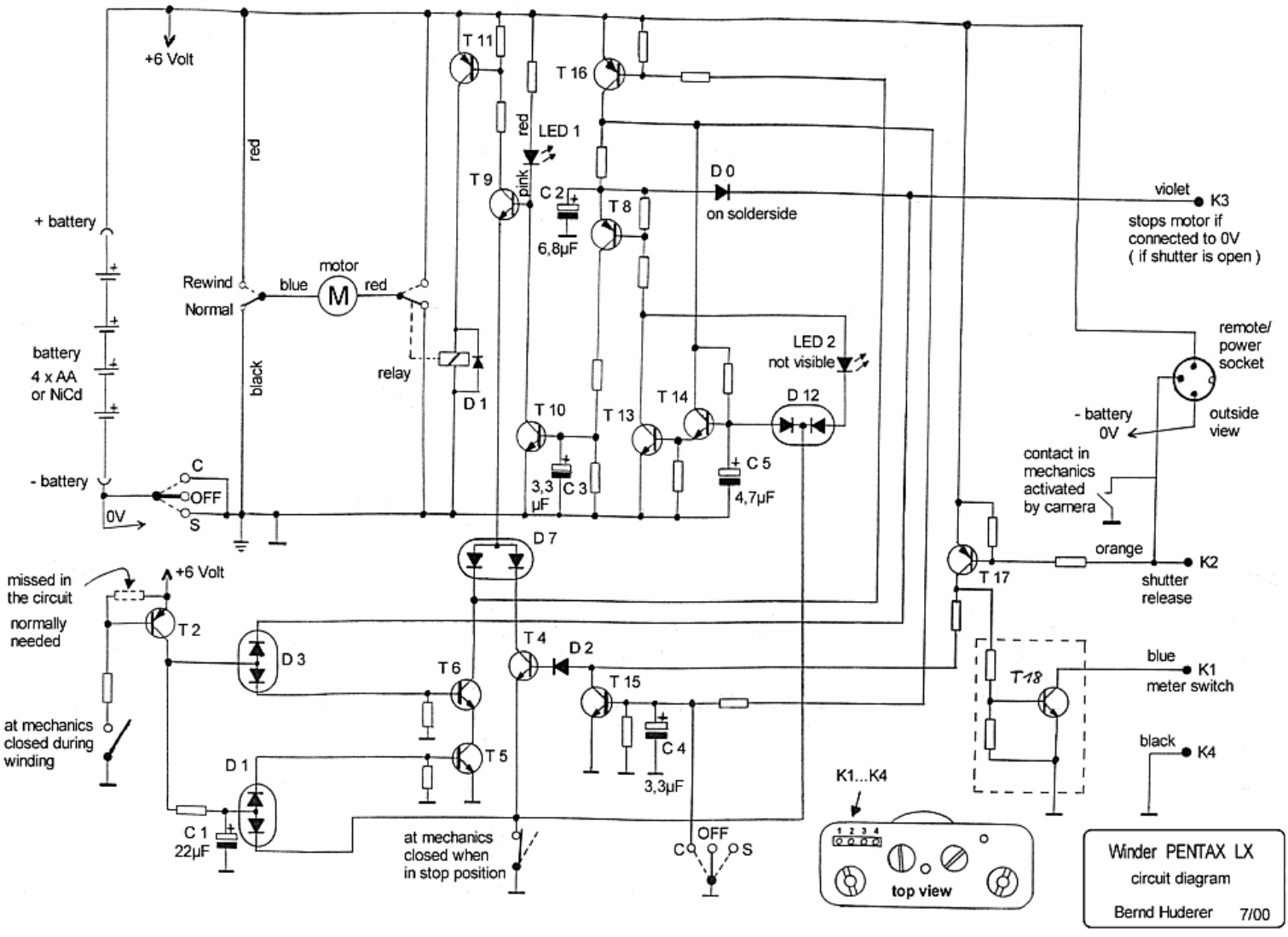
+6 Volt
red
T 11
T 16
LED 1
pink
T 9
C 2
6,8µF
T 8
D 0
on solderside
violet
K3
stops motor if
connected to 0V
(if shutter is open)
+ battery
motor
Rewind
blue
M
red
Normal
relay
D 1
black
battery
4 x AA
or NiCd
LED 2
not visible
T 10
T 13
T 14
D 12
remote/
power
socket
- battery
0V
outside
view
contact in
mechanics
activated
by camera
- battery
C
OFF
S
0V
3,3
µF
C 3
C 5
4,7µF
D 7
orange
K2
shutter
release
T 17
missed in
the circuit
+6 Volt
normally
needed
T 2
D 3
T 4
D 2
T 6
T 15
T18
blue
K1
meter switch
at mechanics
closed during
winding
T 5
C 4
3,3µF
black
K4
D 1
C 1
22µF
at mechanics
closed when
in stop position
OFF
C
S
K1...K4
1 2 3 4
top view
Winder PENTAX LX
circuit diagram
Bernd Huderer 7/00

© Bojidar Dimitrov, 2003

© Bojidar Dimitrov, 2003
PENTAX
PENTAX
SMC PENTAX 1:2
SMC PENTAX 1:2 50mm

© Bojidar Dimitrov, 2002

PEN
PAX
© Bojidar Dimitrov, 2003

TAX
SMC PENTAX-M 1:1.4
© Bojidar Dimitrov, 2003

© Bojidar Dimitrov, 2003

© Bojidar Dimitrov, 2003
PENTAX

PENTAX
SMC PENTAX 28-80
© Bojidar Dimitrov, 2003

PENTAX
PENTAX
© Bojidar Dimitrov, 2003

© Bojidar Dimitrov, 2003

© Bojidar Dimitrov, 2002

PENTAX
super A
smc PENTAX-A 1:1.2 50mm
© Bojidar Dimitrov, 2002

© Bojidar Dimitrov, 2003
PENTAX
PENTAX

PENTAX
*ist
MF
AF.C
AF.S
PENTAX
*ist D
MF
AF.C
AF.S
© Bojidar Dimitrov, 2003
SUP
DATE
AUTO
SEL
MENU
INFO
AE-L
AF
SEL
AUTO
OK
PENTAX

© Ching Araujo, 2004
PENTAX
MZ-S
PENTAX
MZ-S
PENTAX
MZ-S

© Bojidar Dimitrov, 2002
PENTAX
ZX-5N
AF
MF
AF

PENTAX
MZ-S
PENTAX
© Bojidar Dimitrov, 2003

MF-1
ASA

PENTAX
PENTAX AP-K55

AUTO
1/4
B

ASAHI
PENTAX
KX
SMC PENTAX 1:1.2/50
1044761
ASAHI OPT. CO.
JAPAN

© Ceri Evans, 2002

PEM
MAX
© Bojidar Dimitrov, 2003

© Bojidar Dimitrov, 2003
Asahiflex
25
30

Asahiflex
Takumar
1:2.4 f=5cm

© Bojidar Dimitrov, 2003
ASAHI
PENTAX
Asahi Opt. Co., Lens made in Japan 1239878 Fish-eye-Takumar 1:11 / 16

© Bojidar Dimitrov, 2003
ASAHI
PENTAX
Super-Takumar 1:1.8/55
1976810
Asahi Opt. Co.
Lens Made in Japan

© Bojidar Dimitrov, 2003

ELECTRO SPOTMATIC
ASAHI
PENTAX
SMC TAKUMAR 1:1.4/50
ASAHI OPT. CO.
© Bojidar Dimitrov, 2003

© Bojidar Dimitrov, 2002
PENTAX

AF400FTZ
PENTAX
AF400FTZ

PENTAX

ASAHI
PENTAX
KM
ASAHI
PENTAX
KX
ASAHI
PENTAX
K2

PENTAX

PENTAX
AF240FT

© Bojidar Dimitrov, 2002

PENTAX
AF220T

© Bojidar Dimitrov, 2002

PENTAX

© Bojidar Dimitrov, 2002

© Bojidar Dimitrov, 2003

PENTAX

Jaume Lahuerta © 2000

ASAHI
PENTAX
AUTOROBO

© Bojidar Dimitrov, 2003
KMP.BDimitrov.de
100
200
400
TEST
READY
OFF ON AUTO
Fix

PENTAX
AF160

PENTAX

© Bozhidar Dimitrov
(bdd@cs.purdue.edu)
PENTAX

PENTAX

PENTAX

PENTAX

PENTAX
ist D
MF
AF
SMC PENTAX-DA 1:3.5-5.6 16-50mm AL
ø52mm

PENTAX
24
20
18
15
12
PENTAX 12-24

PENTAX
ft
m
∞
30
10
15
5
1
135
100
80
50
PENTAX 50-200

PENTAX 40

PENTAX
*ist D
S
BMC PENTAX-DA 1:3.5-5.6 18-55mm AL
AF
AF

© Bojidar Dimitrov, 2002
PENTAX
SUPER PROGRAM

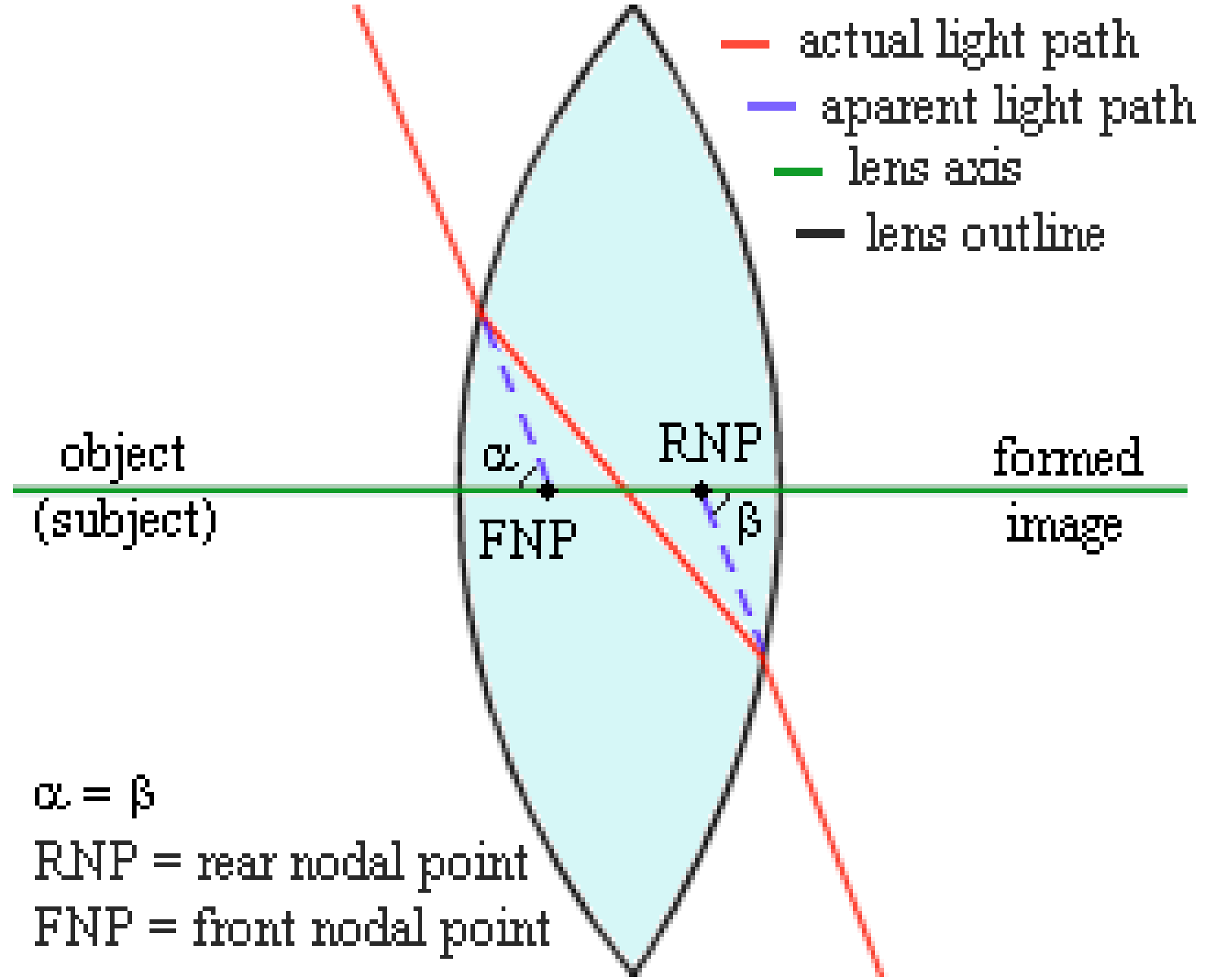
actual light path
aparent light path
lens axis
lens outline
object
(subject)
α
FNP
RNP
β
formed
image
α = β
RNP = rear nodal point
FNP = front nodal point

Update 70

	Pentax camera bodies	Screw	K MF	K AF	MF	%
1	MX		114			8,24%
2	LX		110			7,95%
3	ME Super/ME Super SE		106			7,66%
4	PZ-1p/Z-1p			102		7,38%
5	SuperProgram/SuperA		97			7,01%
6	MZ-3/MZ-5n/ZX-5n			94		6,80%
7	K1000/K1000 SE		73			5,28%
8	Spotmatic/Spotmatic MD/Spotmatic SP	56				4,05%
9	PZ-1/Z-1/Z-1 SE			40		2,89%
10	K2/K2 DMD		37			2,68%
11	KX/KX MD		37			2,68%
12	Spotmatic F/Spotmatic F MD	35				2,53%
13	ME/ME SE		34			2,46%
14	P3/P30/P3n/P30n/P30t		31			2,24%
15	MZ-M/ZX-M		27			1,95%
16	ProgramPlus/ProgramA		25			1,81%
17	MZ 10/ZX 10			21		1,52%
18	ES II	20				1,45%
19	MZ 5/ZX 5			18		1,30%
20	645				16	1,16%
21	SF 1n/SFXn			15		1,08%
22	ES	14				1,01%
23	KM		14			1,01%
24	MZ 7/ZX 7			14		1,01%
25	Spotmatic II	13				0,94%
26	MG		12			0,87%
27	PZ 20/Z 20			12		0,87%
28	ME F			11		0,80%
29	MZ 50/ZX 50			11		0,80%
30	SP500	10				0,72%
31	SV	10				0,72%
32	6x7				9	0,65%
33	S1a	9				0,65%
34	SP1000	9				0,65%
35	PZ 70/Z 70			8		0,58%
36	SF 1/SFX			8		0,58%
37	SF 7/SF 10			8		0,58%
38	SL	8				0,58%
39	Spotmatic SP II	7				0,51%
40	67 II				6	0,43%
41	A3/A3000/A3 Date		6			0,43%
42	MV		6			0,43%
43	P5/P50		6			0,43%
44	PZ 10/Z 10			6		0,43%
45	H1a	5				0,36%
46	H3v	5				0,36%
47	MZ 30/ZX 30			5		0,36%
48	P3		5			0,36%
49	H1	4				0,29%
50	H2	4				0,29%
51	H3	4				0,29%
52	645n				3	0,22%
53	Asahi Pentax (AP)	3				0,22%
54	Asahiflex IIa	3				0,22%
55	ElectroSpotmatic	3				0,22%
56	S3	3				0,22%
57	A3		2			0,14%
58	Asahiflex IIb	2				0,14%
59	K	2				0,14%
60	P5/P50		1			0,07%
61	S2	1				0,07%
62	Spotmatic IIa	1				0,07%
63	Z 5			1		0,07%
64	Z 50p			1		0,07%

	Screw	K MF	K AF	MF
Total number:	231	743	375	34
Total percent:	16,70%	53,72%	27,11%	2,46%

Total number of cameras:	1383
Number of contributors:	344
Average bodies per person:	4,02

ASAHI
PENTAX
K2DMD
© Bojidar Dimitrov, 2002

© Bojidar Dimitrov, 2002
ASAHI
PENTAX
K2
AUTOMATIC
http://kmp.BDimitrov.de/

Preston Cook ©2000
SMC PENTAX 1:4/28
PENTAX
KX

© Bojidar Dimitrov, 2002
ASAHI
PENTAX
KX
KMP.BDim

Preston Cook ©2000
SMC PENTAX
PENTAX
K-A

© Bojidar Dimitrov, 2003
ASAHI
PENTAX
KM

K1000
ASAHI
PENTAX
SE
Gary Schloss ©2000

© Bojidar Dimitrov, 2003
ASAHI
PENTAX
K1000

© Bojidar Dimitrov, 2002
PENTAX
ME F

© Bojidar Dimtirov, 2002
PENTAX
ME super
ASAHI
PENTAX

© Bojidar Dimitrov, 2002
PENTAX
ME
ASAHI

© Giampaolo Simonini, 2003
PENTAX

PENTAX
MG
SMC PENTAX-M 1:2 50mm
3851110 ASAHI OPT. CO., JAPAN

© Bojidar Dimitrov, 2002
MX
PENTAX
ASAHI

ASAHI
PENTAX
MV
SMC PENTAX-M 1:2 50mm
3509035 ASAHI OPT. CO., JAPAN

© Karl Stoppel, 2002
PENTAX
program A
SELF
PENTAX

PENTAX
SELF TIMER
© Bojidar Dimitrov, 2003

© Bojidar Dimitrov, 2002
PENTAX

© Bojidar Dimitrov, 2003
PENTAX

PENTAX
SFX
JCII
MANUAL
SERVO
SINGLE
© Bojidar Dimitrov, 2003

© Bojidar Dimitrov, 2002
PENTAX
MANUAL
SERVO
SINGLE AF

PENTAX
JCII
AF
© Bojidar Dimitrov, 2003

© Bozhidar Dimitrov
bdd@cs.purdue.edu

PENTAX
ASAHI OPTICAL CO.
smc PENTAX-M

PENTAX
SMC PENTAX-A 1:2 80mm

© Bojidar Dimitrov, 2003
PENTAX
Z-1
MANUAL
SERVO
SINGLE

© Bojidar Dimtirov, 2002

PENTAX

PENTAX
MANUAL
SERVO
SINGLE

PENTAX
Z-20
MF
AF

PENTAX
Z-10
PENTAX 70-200

© Bojidar Dimitrov, 2003

© Bojidar Dimitrov, 2003

PENTAX
MZ-S
ON
OFF
HOLD
AE-L
AF
DATE
SELECT
ADJUST
© Bojidar Dimitrov, 2003

PENTAX
MZ-3
AF
MF
AF
© Bojidar Dimtirov, 2002

© Bojidar Dimitrov, 2002
PENTAX
MZ-5N
MF
AF
http://kmp.BDimitrov.de/

PENTAX
MZ-S

© Bojidar Dimitrov, 2003
PENTAX
MZ
6
AV
MF
AF

© Bojidar Dimitrov, 2003
PENTAX
MZ-7

© Bojidar Dimitrov, 2003
PENTAX
MZ-10
PENTAX
MF
AF

PENTAX
MZ-30

© Bojidar Dimitrov, 2003
PENTAX
MZ-50
PENTAX

© Bojidar Dimitrov, 2003
PENTAX
MZ-60

© Bojidar Dimitrov, 2003
PENTAX
MZ-M

© Bojidar Dimitrov, 2003
PENTAX
*ist
MF
AF.C
AF.S
AUTO
SIEL
DATE

© Bojidar Dimitrov, 2003
PENTAX
*ist D
MF
AF.C
AF.S
DPOF
MENU
INFO
AE-L
AF
SEL
AUTO
OK
PENTAX

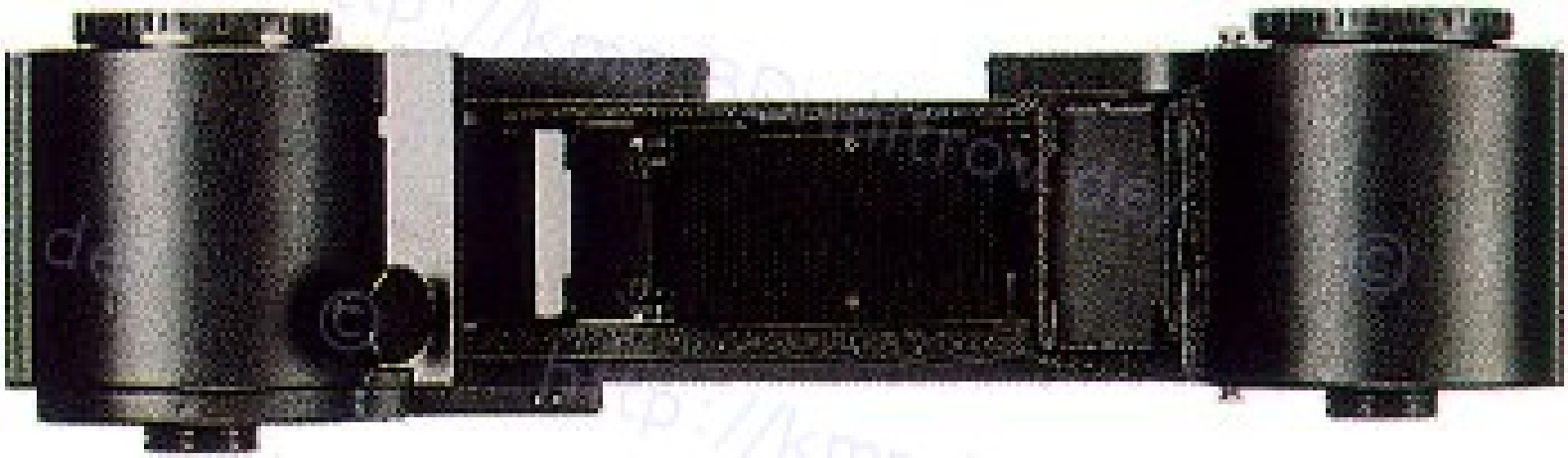

PENTAX
SETTING
PUSH
MENU
TITLE
DISPLAY
WB
AE-L

PENTAX
PENTAX 14

© Bojidar Dimitrov, 2002

SMC PENTAX 1:3.5/15
SKYLIGHT
22 16 11 8 5.6 3.5

© Bojidar Dimitrov, 2002

© Bojidar Dimitrov, 2002

© Bojidar Dimitrov, 2002

© Bojidar Dimitrov, 2003

© Bojidar Dimitrov, 2002

© Bojidar Dimitrov, 2003

© Bojidar Dimitrov, 2002

© Bojidar Dimitrov, 2002

John Pontier © 2001

© Bojidar Dimitrov, 2002

© Bojidar Dimitrov, 2002

© Bojidar Dimitrov, 2002

© Eckhard Braß, 2002

© Bojidar Dimitrov, 2002

© Rob Studdert - Digital Image Studio

© Bojidar Dimitrov, 2003

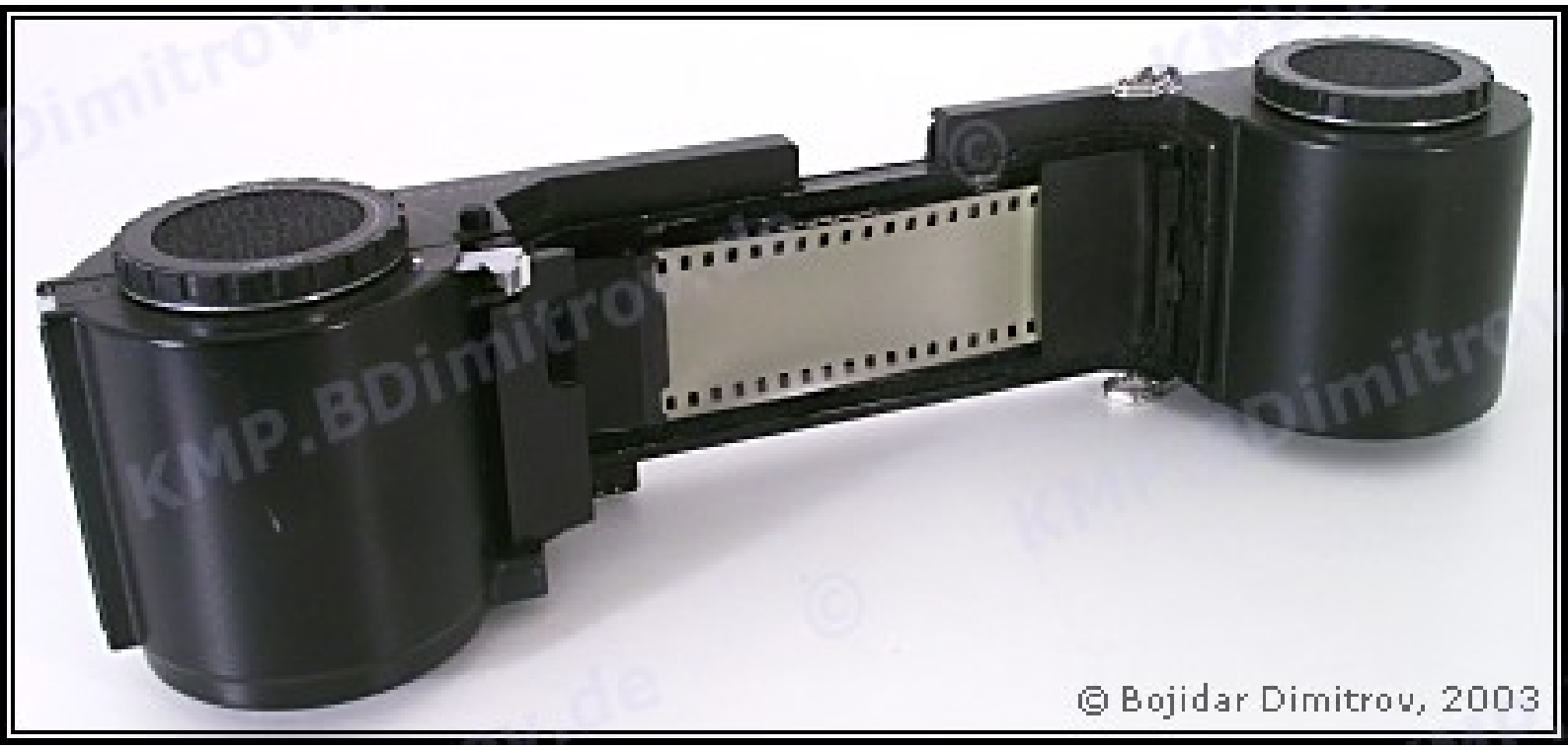
© Bojidar Dimitrov, 2003

© Bojidar Dimtirov, 2002

© Bojidar Dimitrov, 2002

PENTAX
∞ 10 5 3 2 1 ft
3 1.5 1 0.7 0.5 m
22 11 5.6
A 22 16 11 8 5.6 4 2.8
© Bojidar Dimitrov, 2002

∞ 7 3 ft
2 1 0 m
PENTAX 28
SOFT
22 16 11 8 5.6 4 2.8

© Bojidar Dimitrov, 2003

© Bojidar Dimitrov, 2002

SMC PENTAX-M 1:3.5 28mm 6666359
22 16 11 8 5.6 3.5

© Bojidar Dimitrov, 2002

© Bojidar Dimitrov, 2002

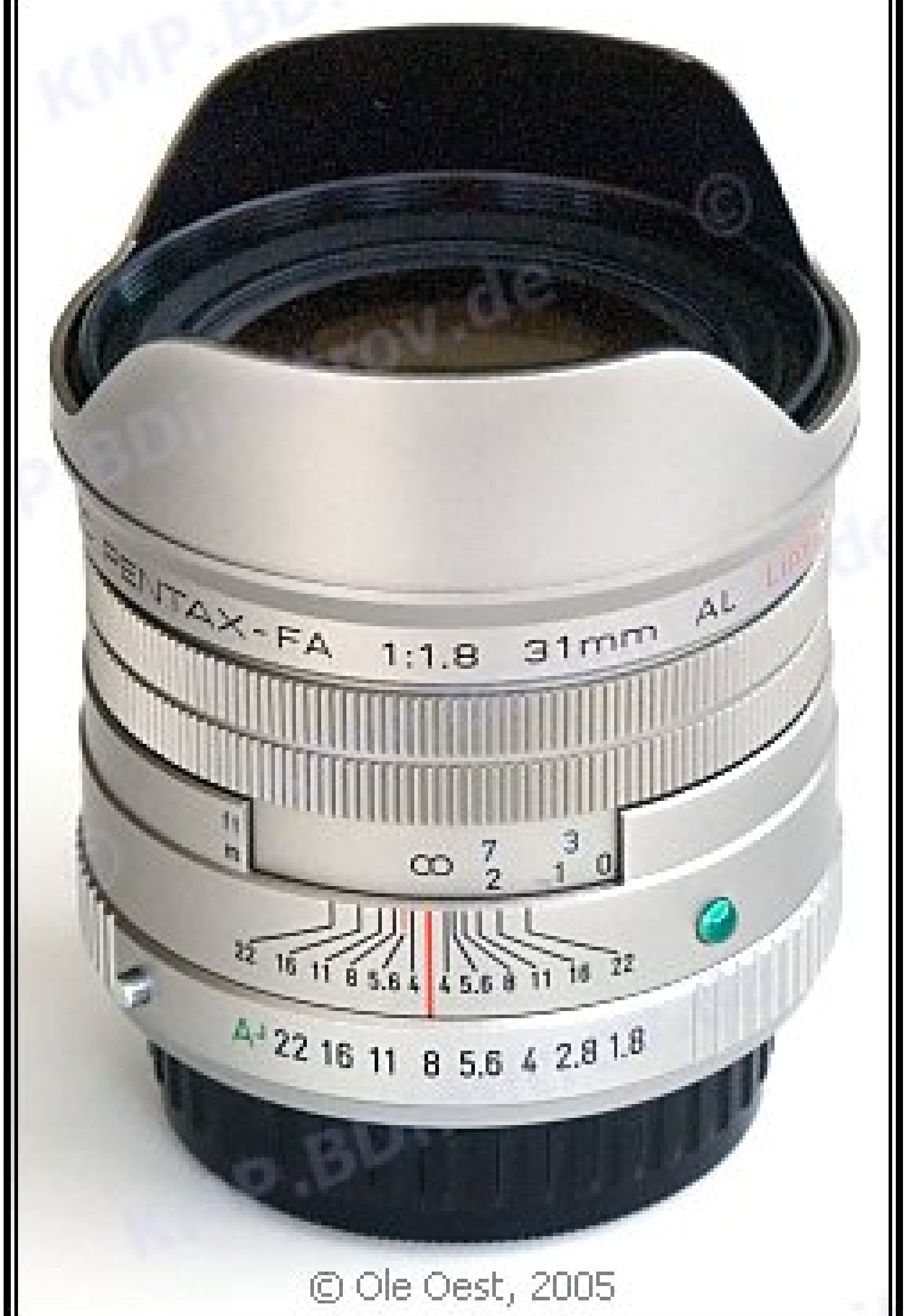

© Ole Oest, 2005

ASAHI OPT. CO., JAPAN
ft
m
∞
15
4.5
5
1.5
22 16 11 8 5.6 4 2.8 •1.4

© Bojidar Dimitrov, 2002

© Bojidar Dimtirov, 2002

PENTAX
ft
m
PENTAX 35
A 22 16 11 8 5.6 4

© Eckhard Braß, 2001

Arnold Stark ©2000

© Bojidar Dimitrov, 2002

© Bojidar Dimitrov, 2002

© Bojidar Dimitrov, 2002

© Bojidar Dimitrov, 2002

PENTAX
DATA BACK F
MODE SELECT ADJUST

© Bojidar Dimitrov, 2002

© Bojidar Dimitrov, 2003

© Bojidar Dimitrov, 2002

© Kim Coxon, 2005

© Bojidar Dimitrov, 2002

© Rob Studdert - Digital Image Studio

© Bojidar Dimitrov, 2002

© Bojidar Dimitrov, 2002

© Bojidar Dimitrov, 2002

© Bojidar Dimitrov, 2002

© Andrew Hurst, 2004

© Bojidar Dimitrov, 2002

© Bojidar Dimitrov, 2002

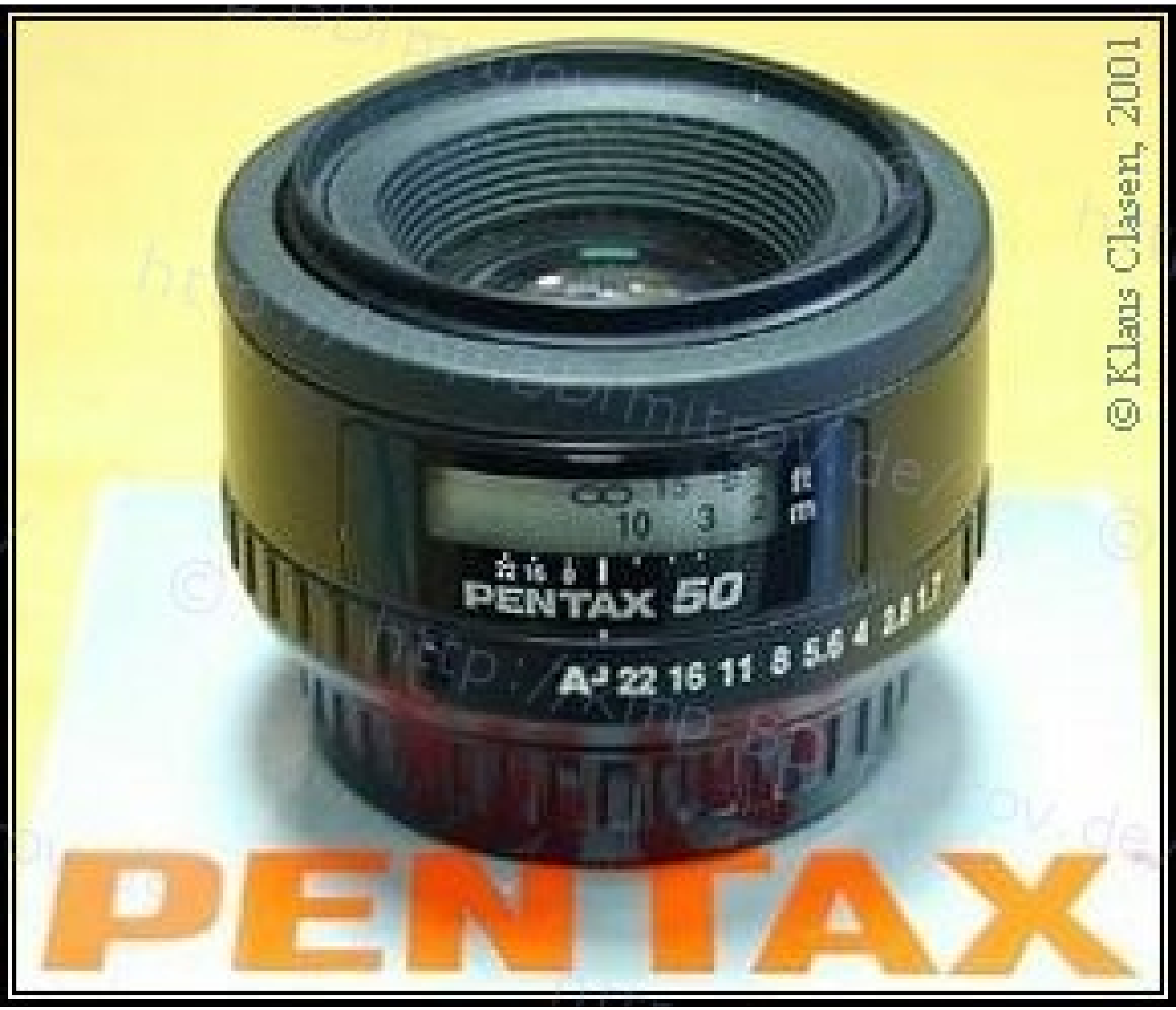

© Klaus Claen, 2001

© Bojidar Dimitrov, 2002

© Rob Studdert - Digital Image Studio

PENTAX
SMC PENTAX-F
1:2.8
50
MACRO
PENTAX
A 32 22 16 11 8 5.6 2.8
© Bojidar Dimitrov, 2002

© Bojidar Dimitrov, 2002

25
5
3
2
1
∞
ft
m
CLAMP
PENTAX 50 MACRO
A 32 22 16 11 8 5.6 4 2.8

© Fabio Cittadini, 2002

© Bojidar Dimitrov, 2002

© Bojidar Dimitrov, 2002

© Bozhidar Dimitrov
(bdd@cs.purdue.edu)

© Bojidar Dimitrov, 2002

smc PENTAX-A
1:1.4
ft
m
40
12
15
5
10
3
22 8 8 22
A
22 16 11 8 5.6 4 2.8 2
KMF. BDimitrov.com
© Bojidar Dimitrov, 2002

© Bojidar Dimitrov, 2003

© Bojidar Dimitrov, 2002

CO., JAPAN
SMC PENTAX
ft
m
∞ 40 20 13
12 6 4
22 16 8 4 4 8 16 22
22 16 11 8 5.6 4 2.8 2
© Bojidar Dimitrov, 2002

ctp.4kmp.B

PENTAX
SMC
PENTAX-F
1:2.8
85
SOFT
32 22 16 11 8 5.6 4 2.8
32 22 16 11 8 5.6 4 2.8

PENTAX 85
SOFT
ft
m
32 22 16 11 8 5.6 4 2.8
32 22 16 11 8 5.6 4 2.8

MODE
ADJUST
SELECT
QUARTZ
DATE

© Bojidar Dimitrov, 2002

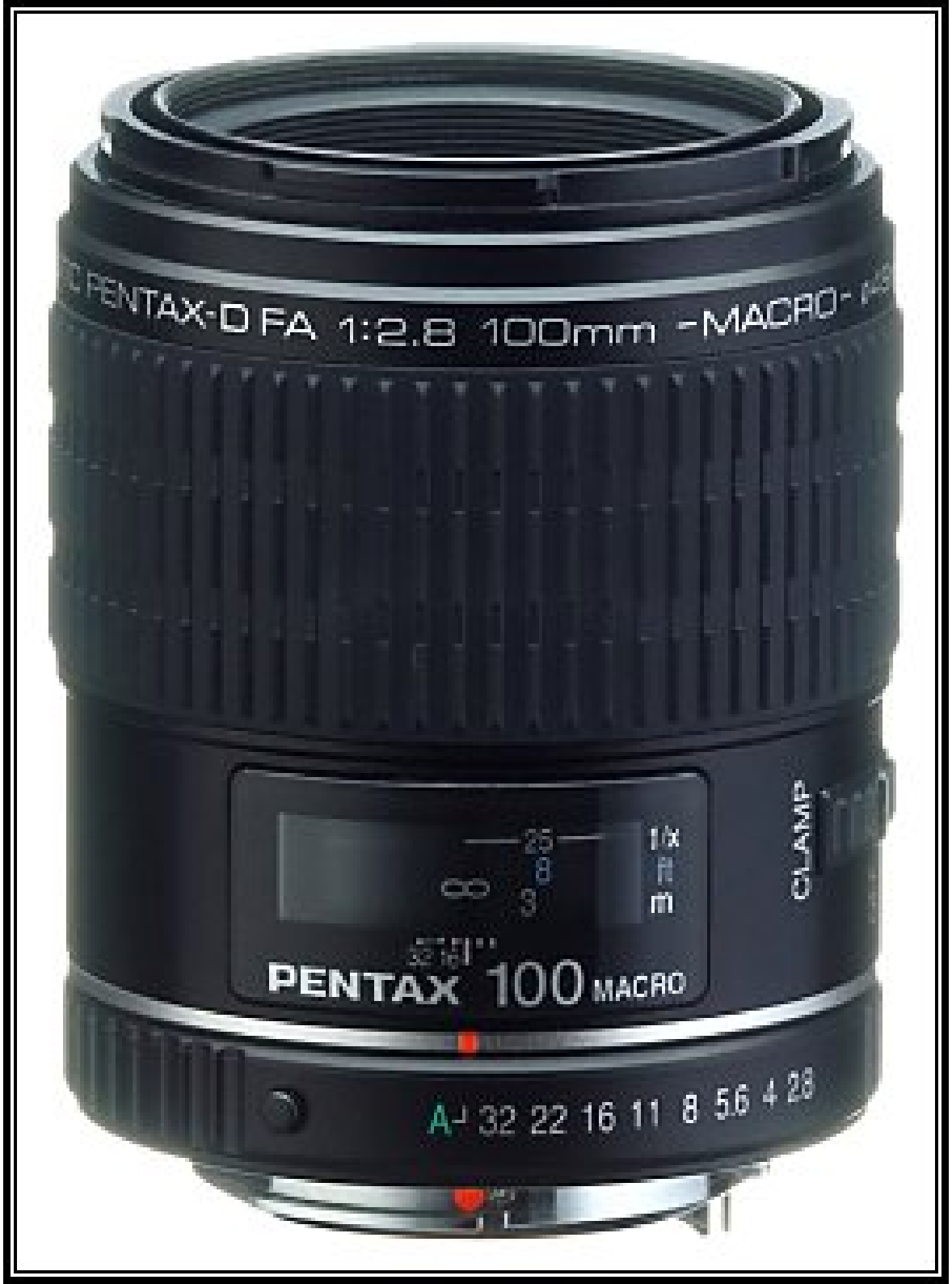
PENTAX-D FA 1:2.8 100mm -MACRO-
CLAMP
PENTAX 100 MACRO
A 32 22 16 11 8 5.6 4 2.8

PENTAX
CLAMP

© Bojidar Dimitrov, 2002

© Bojidar Dimitrov, 2002

© John Whittingham, 2003

ft
m
∞
20
7
10
3
7
2
5
1.5
1
U
PENTAX 100
MACRO
22 16 11 8 5.6 3.5

© Bojidar Dimitrov, 2002

© Bojidar Dimitrov, 2002

© Bojidar Dimitrov, 2002

© Bojidar Dimitrov, 2003

© Bojidar Dimitrov, 2002

© Rob Studdert - Digital Image Studio

SMC PENTA-A 1:2.8 135mm
© Bojidar Dimitrov, 2003

© Bojidar Dimitrov, 2002

© Bojidar Dimitrov, 2002

© Bojidar Dimitrov, 2003

MODE
ADJUST
SELECT

© Bojidar Dimitrov, 2002

© Bojidar Dimitrov, 2002

© Bojidar Dimitrov, 2002

6218722
CONTAX 1:4/150
© Bojidar Dimitrov, 2003

PENTAX-A
1:2.8
© Rob Studdert - Digital Image Studio

smc PENTAX 1:2.5 200mm
ft
m
∞
120
50
50
20
10
32 22 16 11 8 5.6 4 2.5
© Bojidar Dimitrov, 2002

PENTAX
© Bojidar Dimitrov, 2002

PENTA
© Bojidar Dimitrov, 2002

SMC PENTAX-M 1:4 200mm
© Bojidar Dimitrov, 2002

© Fabio Cittadini, 2002

SELECT
DATE
ADJUST

SMC PENTAX
© Rob Studdert - Digital Image Studio

PENTAX

PENTAX
m
ft
∞
45
35
28
20
PENTAX 16-45

© Bojidar Dimitrov, 2003

PENTAX
55
45
35
24
18
PENTAX 18-55

PENTAX
PENTAX 18-35
PENTAX 18-35
© Bojidar Dimitrov, 2003

PENTAX
PENTAX 20-35
25
28
24
20
A 22 16 11 8 5.6

© Bojidar Dimitrov, 2002

© Bojidar Dimitrov, 2002

© Eckhard Braß, 2002
ASA
PENTAX
DATA II

ASAHI OPT. CO. JAPAN
SMC PENTAX ZOOM
1:3.5 28mm~1:4.5 50mm
5385138
G.A.J.
de Fockert ©2000

PENTAX
SMC
PENTAX-F
ZOOM
PENTAX
© Bojidar Dimitrov, 2002

SMC PENTAX-M ZOOM 1:3.5 28mm-1:4.5 60mm
8172245 ASAHI OPT. CO., JAPAN
G.A.J.
de Fockert ©2000

PENTAX
PENTAX 24-90
PENTAX 24-90
© Bojidar Dimitrov, 2002

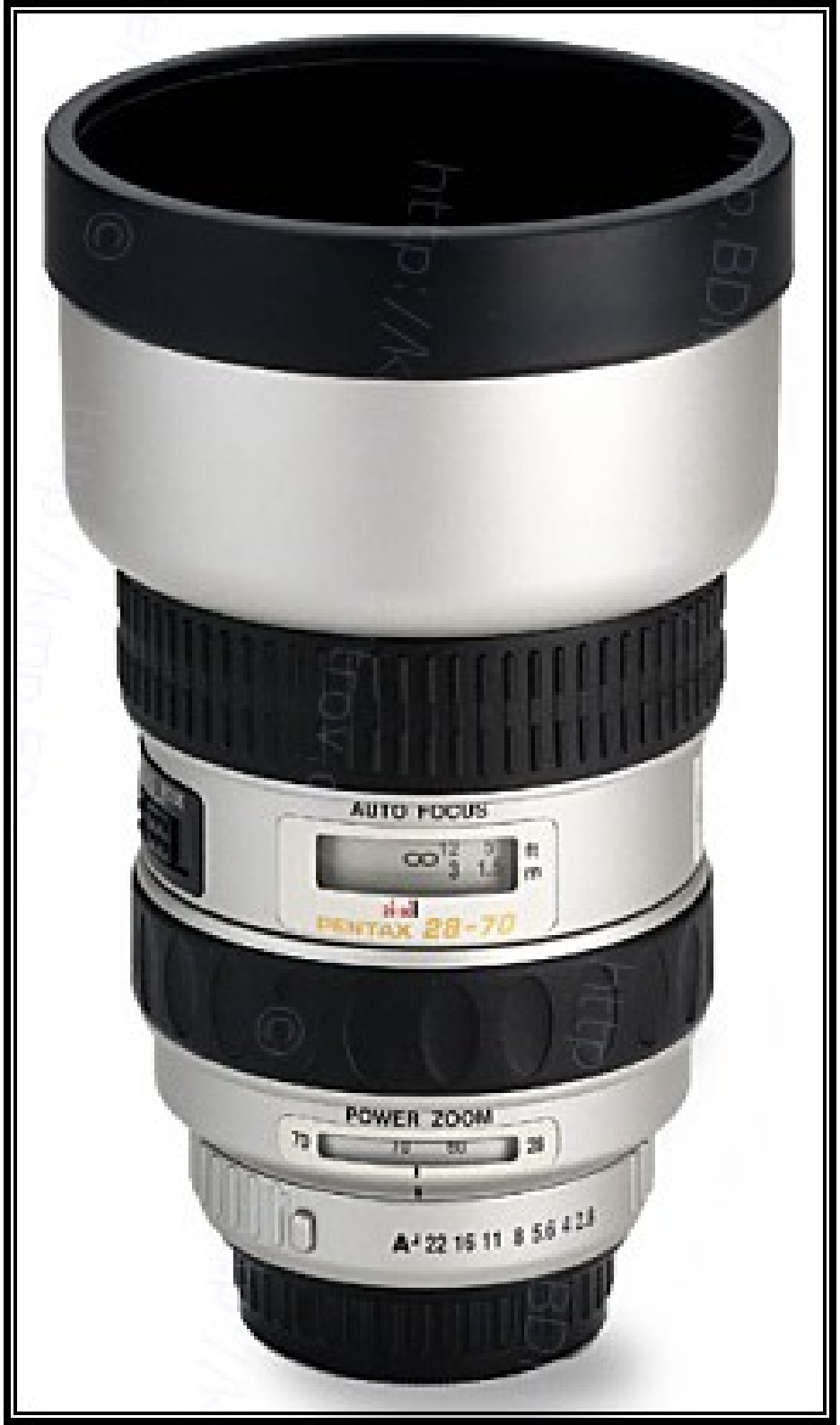
AUTO FOCUS
PENTAX 28-70
POWER ZOOM

PENTAX 28-70
28
70
A 22 16 11 8 5.6 4
© Bojidar Dimitrov, 2003

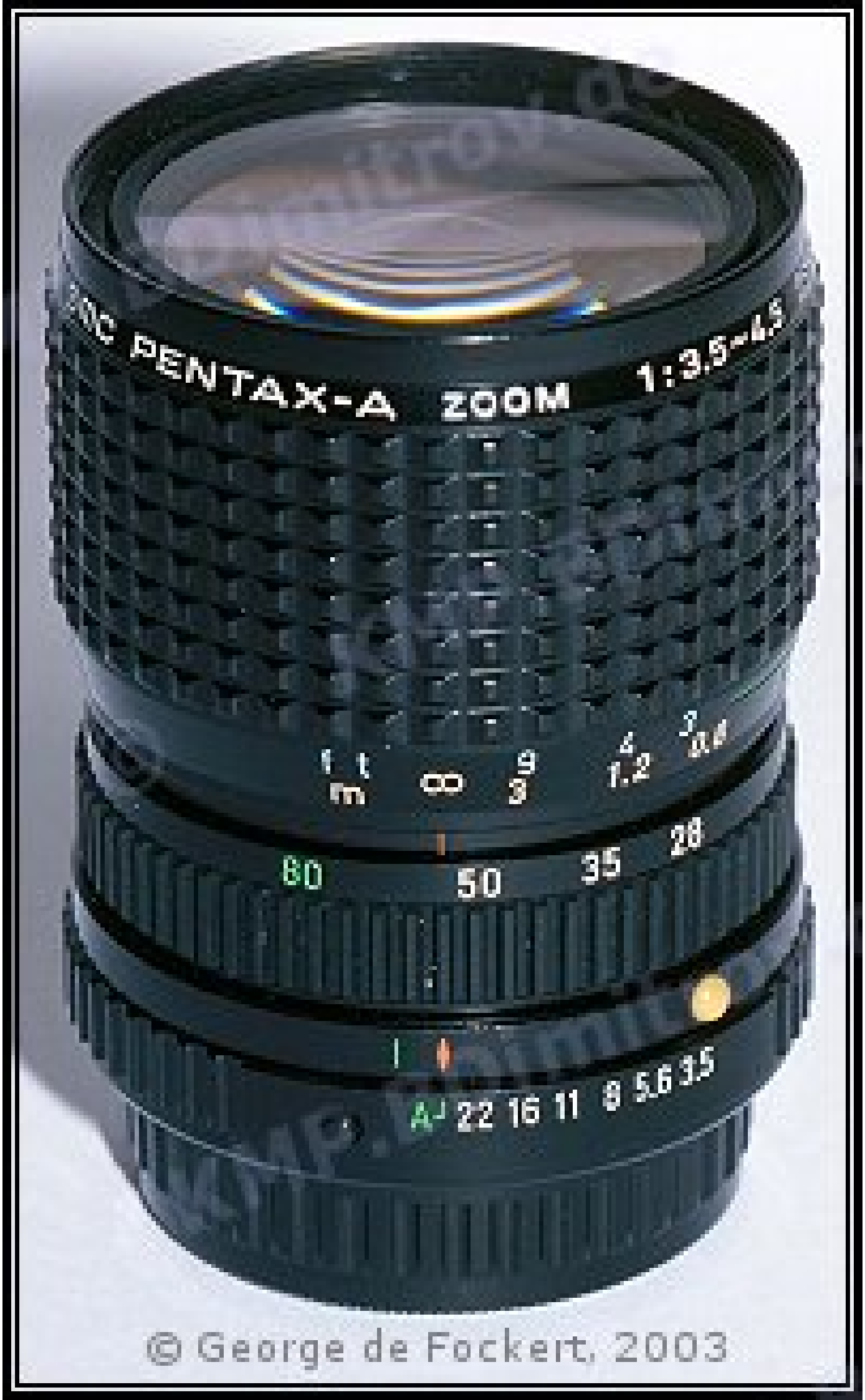

© George de Fockert, 2003

© Bojidar Dimitrov, 2003

© Bojidar Dimitrov, 2003

© Bojidar Dimitrov, 2002

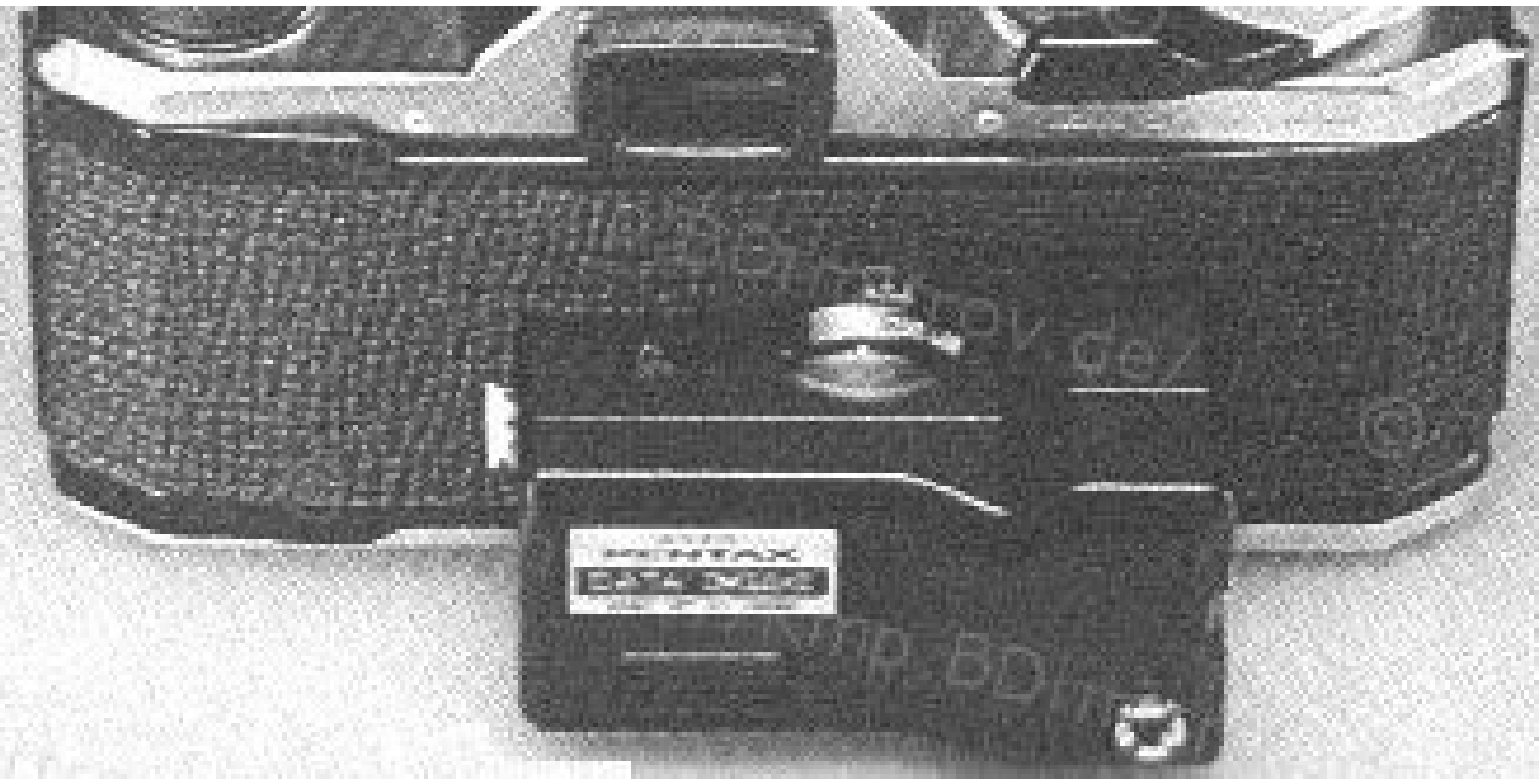

Bojidar Dimitrov's PENTAX K-Mount Page

Lenses

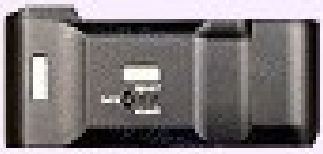

Backs

Winders

Flashes

Bodies

Miscellaneous

Focusing

Power

Teleconverters

Macro

PENTAX 28-90

© Bojidar Dimitrov, 2004

© Bojidar Dimitrov, 2003
80
50
35
28
PENTAX 28-80
PENTAX 28-80

PENTAX 28-105
POWER ZOOM
© Bojidar Dimitrov, 2003

© Bojidar Dimitrov, 2002

SMC PENTA-X-A ZOOM
1:4 28-135mm
MACRO
© Bojidar Dimitrov, 2003

PENTAX 28-105
70 50 35 28
A 22 16 11 8 5.6 4
105
© Bojidar Dimitrov, 2003

PENTAX
© Rob Studdert - Digital Image Studio

PENTAX 28-200
PENTAX 28-200
© Bojidar Dimitrov, 2002

PENTAX

YEAR
MONTH
DAY
PENTAX

© Eckhard Braß, 2001

smc PENTAX-DA

PENTAX
PENTAX
SMC
PENTAX-F
1:4.5
300
LOCK
© Bojidar Dimtirov, 2002

PENTAX
PENTAX-FA 300
© Bojidar Dimitrov, 2002

PENTAX

© Bojidar Dimitrov, 2002

smc PENTAX
© Bojidar Dimitrov, 2003

Enrico Punelli © 2000

PENTAX
© Clover, 2001

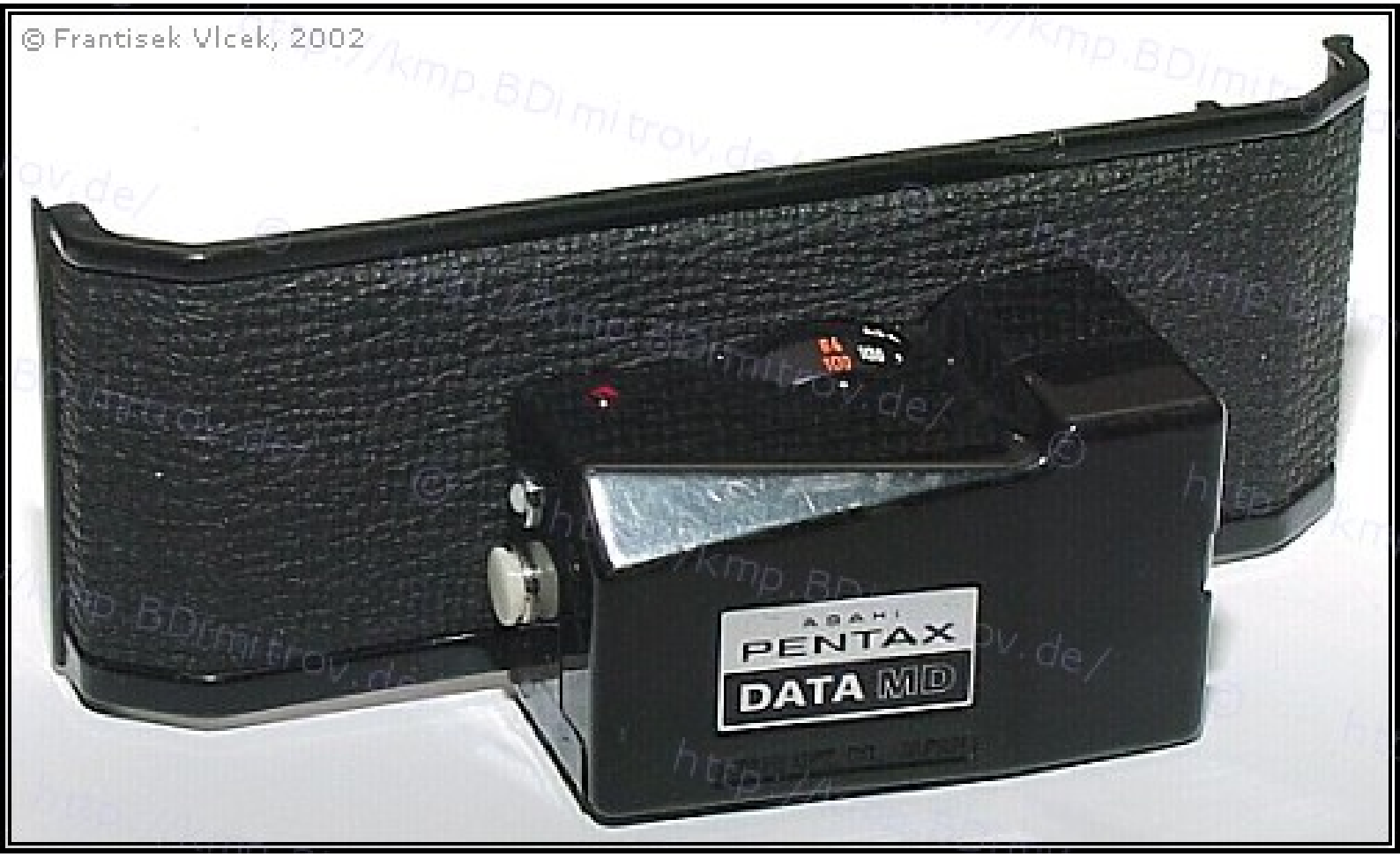
© Frantisek Vlcek, 2002
ASAHI
PENTAX
DATA MD

ASAHI OPT. CO. JAPAN

PENTAX
SMC PENTAX-F*
600mm f/4 ED[IF]

PENTAX
© Bojidar Dimitrov, 2003

PENTAX

PENTAX

smc PENTAX REFLEX 1:11 1000mm

SMC PENTAX-M REFLEX

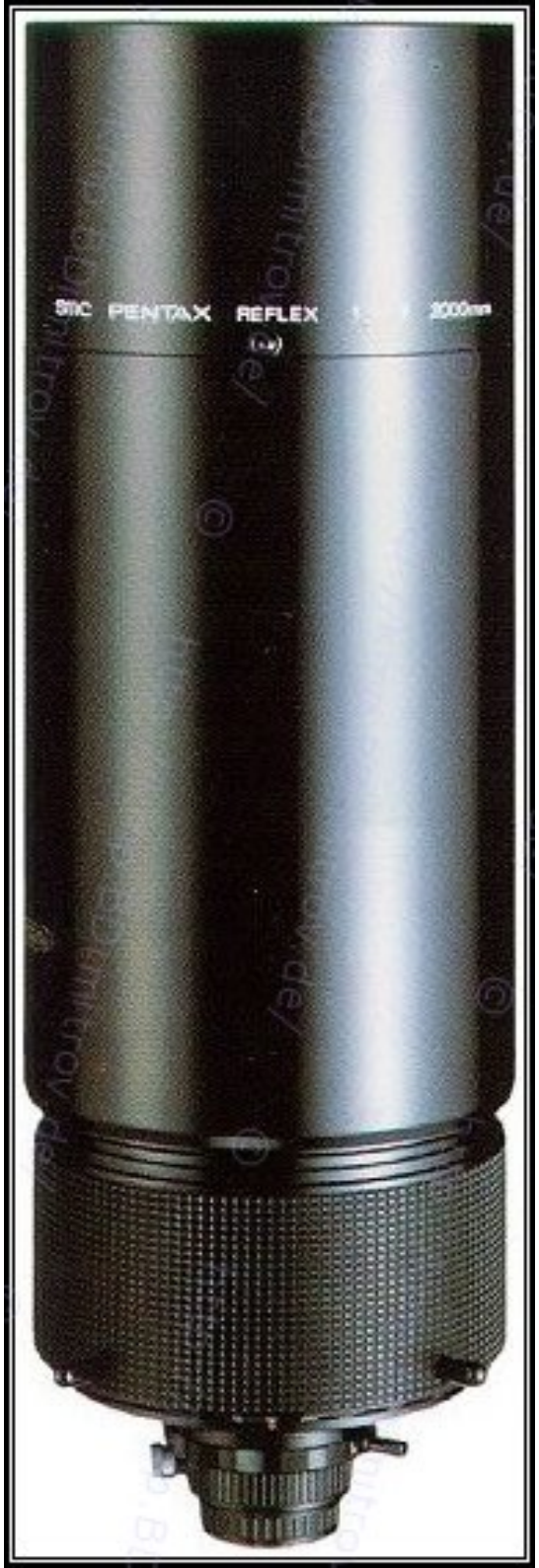
SMC PENTAX REFLEX
2000mm

SMC PENTAX
PASSED
PASSED
© Bojidar Dimitrov, 2002

© Bojidar Dimtirov, 2002
PENTAX-M ZOOM 1:2.8 35mm-70mm
PENTAX-M ZOOM 1:2.8 35mm-70mm

G.A.J. de Fockert © 2000

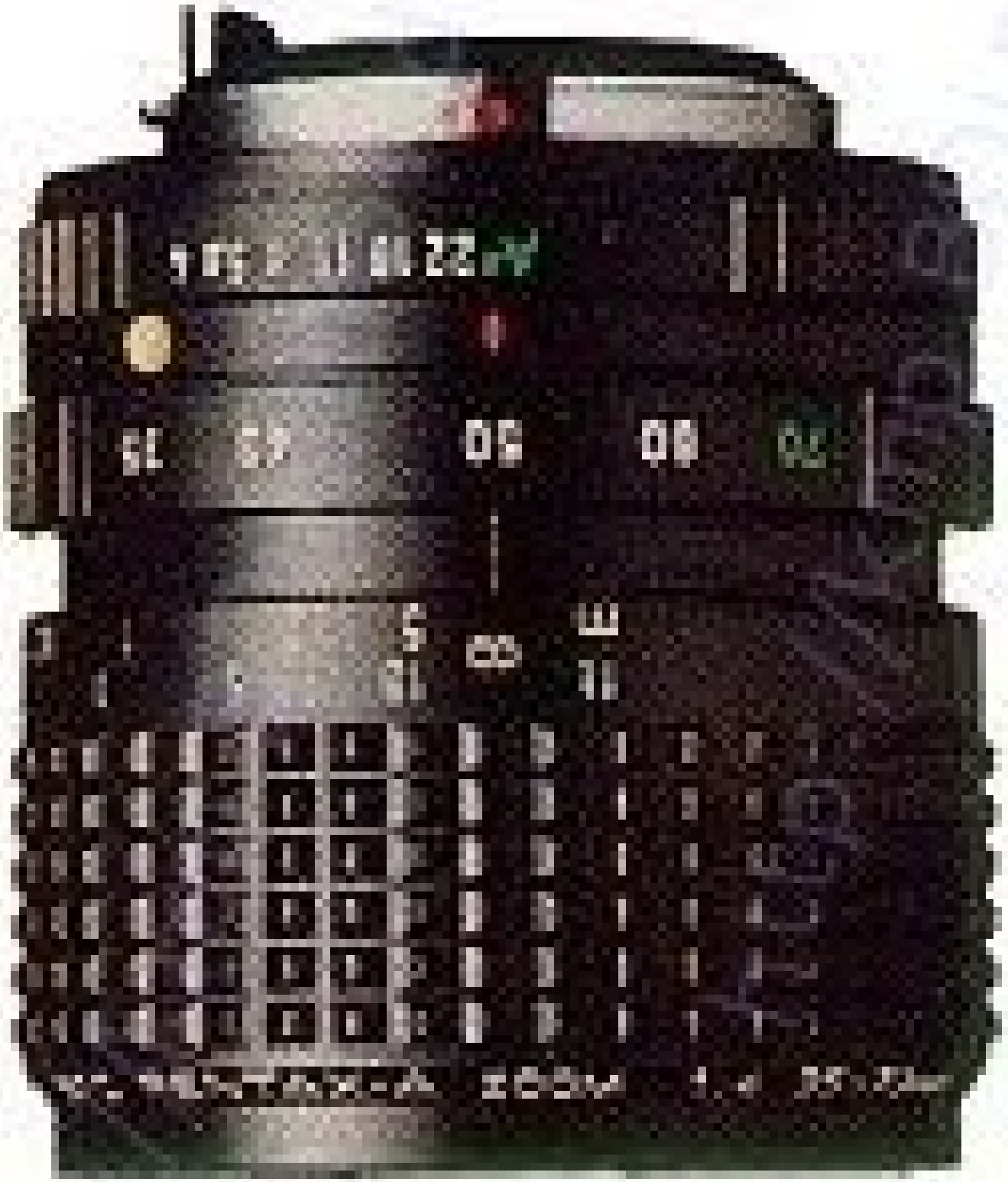

© Bojidar Dimitrov, 2002

© 2002, E.R.N. Reed

© Bojidar Dimitrov, 2003

© Bojidar Dimitrov, 2003

SC PENTAX-A ZOOM 1:3.5
© Bojidar Dimitrov, 2003

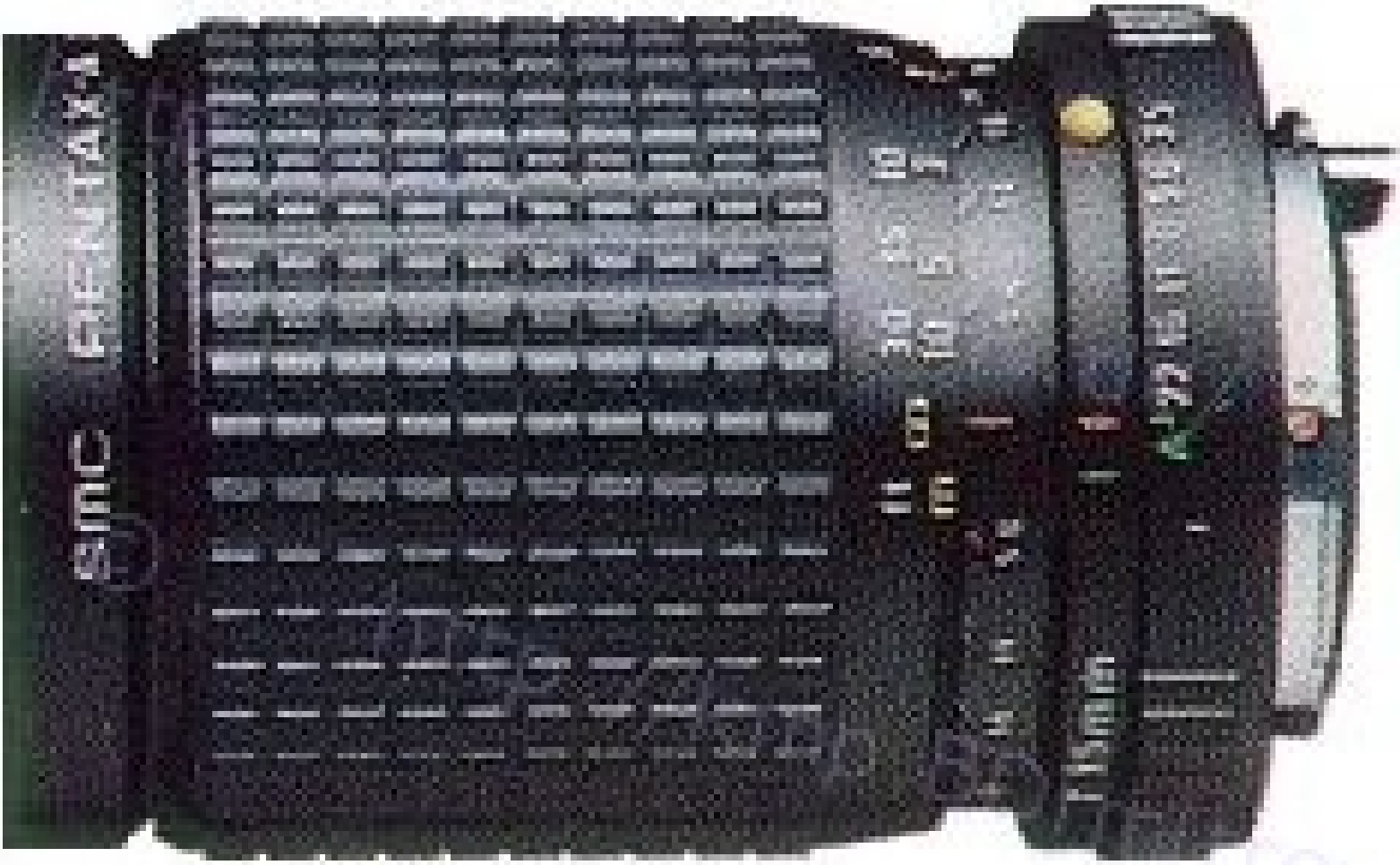
SMC
PENTAX-A

© Bojidar Dimitrov, 2002

Gary Schloss ©2000
YEAR
MONTH
DAY
PENTAX
DIAL DATA
B.C.
ASAHI OPT. CO., JAPAN
ASA
25 - 50
32
64 - 160
200 - 400
100 - 400
COLOR
B&W

© Eckhard Brass, 2004
ZOOM 1:35-4.5
ZOOM 1:35-4.5

5130679
45~125mm
45
50
60
70
80
100
125mm
© Bojidar Dimitrov, 2003

© Bojidar Dimitrov, 2003

50
15
ft
m
PENTAX 70-200
200
85
70
70
A 32 22 16 11 8 5.6 4

© Bojidar Dimitrov, 2002

© Bojidar Dimitrov, 2002

© Bojidar Dimitrov, 2002

PENTAX-FA J 1:4.5(32)-5.8(38) 75-300mm
75
100
135
200
300
PENTAX 75-300
© Bojidar Dimitrov, 2003

SMC PENTAX ZOOM 1:4.5 80mm-200mm
G.A.J. de Fockert ©2000

© Bojidar Dimitrov, 2003
PENTAX
DIGITAL DATA M
'03 6 12
ASA/ISO
160~400
64~125
6~50
RESET
MODE Yr/Hr Mo/Se Dy/Mi
ASAHI OPT. CO., JAPAN

FOCUS MODE
© Bojidar Dimitrov, 2003

G.A.J. de Fockert ©2000

PENTAX-M ZOOM
60-200
60
100
120
135
150
200mm

Arnold Stark © 2000

30 ft
10 m
PENTAX 80-200
135
100
80
A 32 22 16 11 8 4.7

PENTAX 80-200
80
100
135
200
A 32 22 16 11 8 5.6 4
© Bojidar Dimitrov, 2003

© Bojidar Dimitrov, 2002

Paul Lachel © 2001

PENTAX 100-300
300
200
135

PENTAX
INTERVAL
DATA BACK I
02 02 90
INTERVAL
PRINT
PRINT

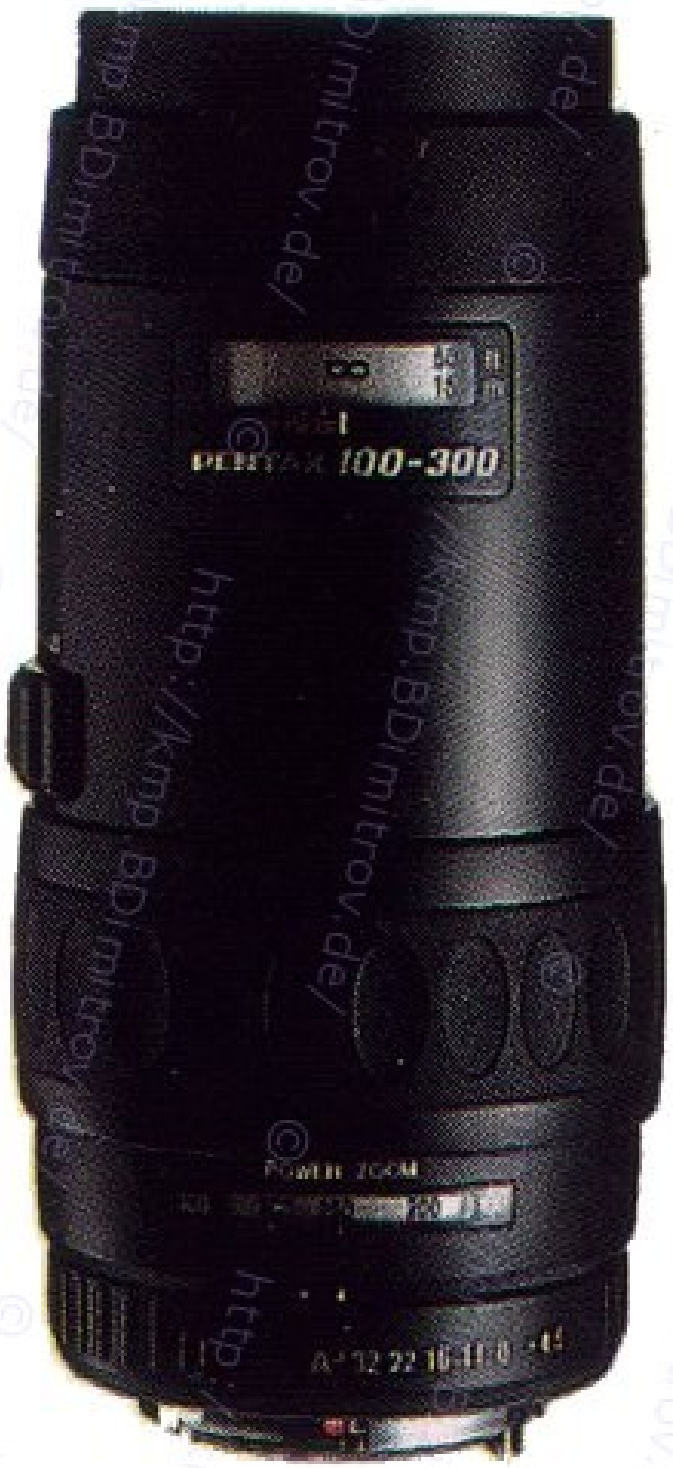
100-300
POWER ZOOM

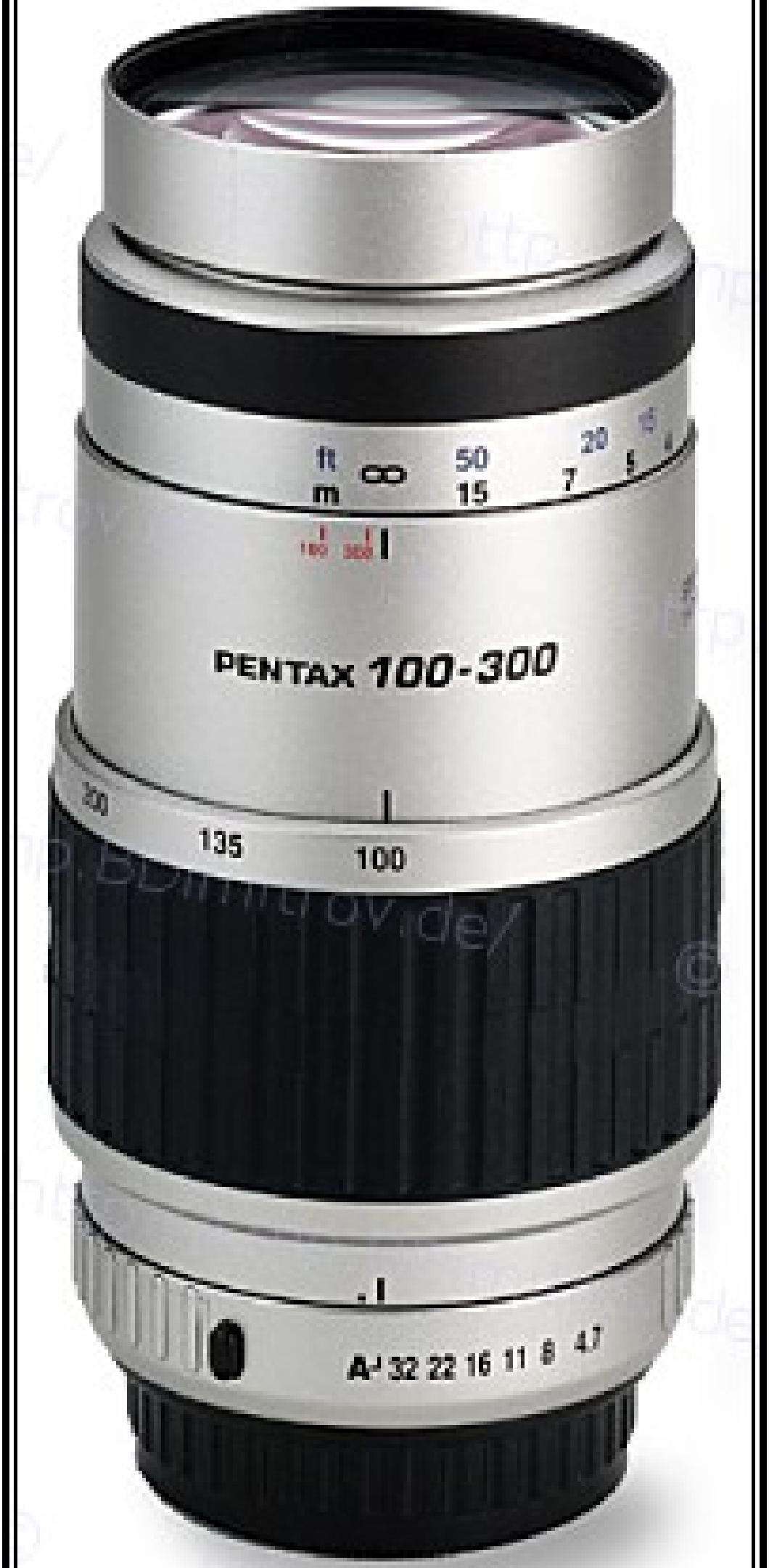
ft
m
∞
50
15
20
7
5
PENTAX 100-300
135
100
A 32 22 16 11 8 4.7

SDC PENTAX-F* ZOOM
250mm—600mm f/5.6 ED[IF]

PENTAX

© Lauren Cohn, 2004
2.4mm MACRO 1:2.8 ø52 8200356
MC AUTO OPC PHASE 2 CCT

© Bojidar Dimitrov, 2003

© Ronald Moore, 2003

© Gary Murphy, 2003
MC AUTO CPC PHASE 2 CCT
28 mm 1:2.8 φ49 5307479
A 22 16 11 8 16 •2.8

TAKUMAR-A 1:2.8 28mm

1:2.8 28mm
TAKUMAR
22 16 11 8 5.6 2.8
© Serdar Temur, 2002

MACRO
1:2.8 Ø52 8113032
28mm
MC AUTO CPC PHASE 4 CCT

© Bozhidar Dimitrov
(bdd@cs.purdue.edu)

TAKUMAR BAYONET
Gary Schloss ©2000

PENTAX
BIRDS-EYE

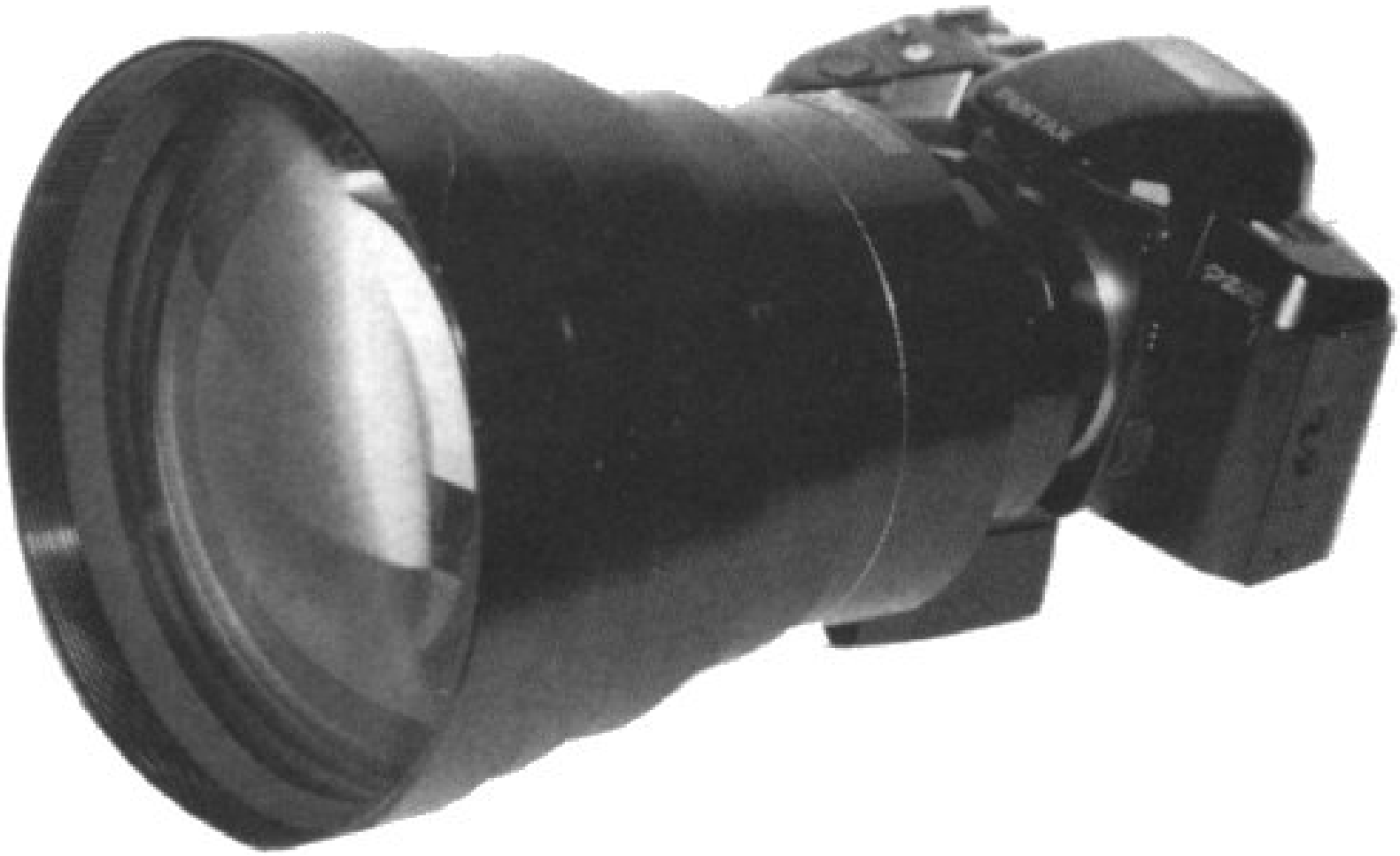
PENTAX

PENTAX-A ZOOM
1:3.5-4.5
ft
m
∞
15
5
8
2.5
5
1.7
70
50
35
28
A
22
16
11
8
5.6
3.5

TAKUMAR-A ZOOM
28mm F3.5~80mm F4.5

MC COSMICAR ZOOM
1:3.5~4.5
PASSED
MACRO
ft
m
70
50
15
8
5
2.5
35
© Robert Gold, 2005

Steve Hall ©2000

© Bozhidar Dimitrov
(bdd@cs.purdue.edu)

© Ian Taylor, 2003

G.A.J. de Fockert © 2000

PASSED
15
7
5
m
5
2
70
60
50
40
35
22
16
11
8
5.6
4

ZOOM 1:4

4.5 200M CPC PHASE 2 CC1

http://kmp.BDimitrov.de/
http://kmp.BDimitrov.de/

PENTAX-A ZOOM 1:4 70-200mm
ft
m
∞
20
10
9
3
6
2
70
85
100
120
150
f 200mm
32 22
A 32 22 16 11 8

TAKUMAR-A
70
85
100
120
150
200mm
© Bozhidar Dimitrov
(bdd@cs.purdue.edu)

MC FINEX ZOOM 1:4 70~200mm
ft
m
20
9
6
70
50
22 16 11 8 5.84

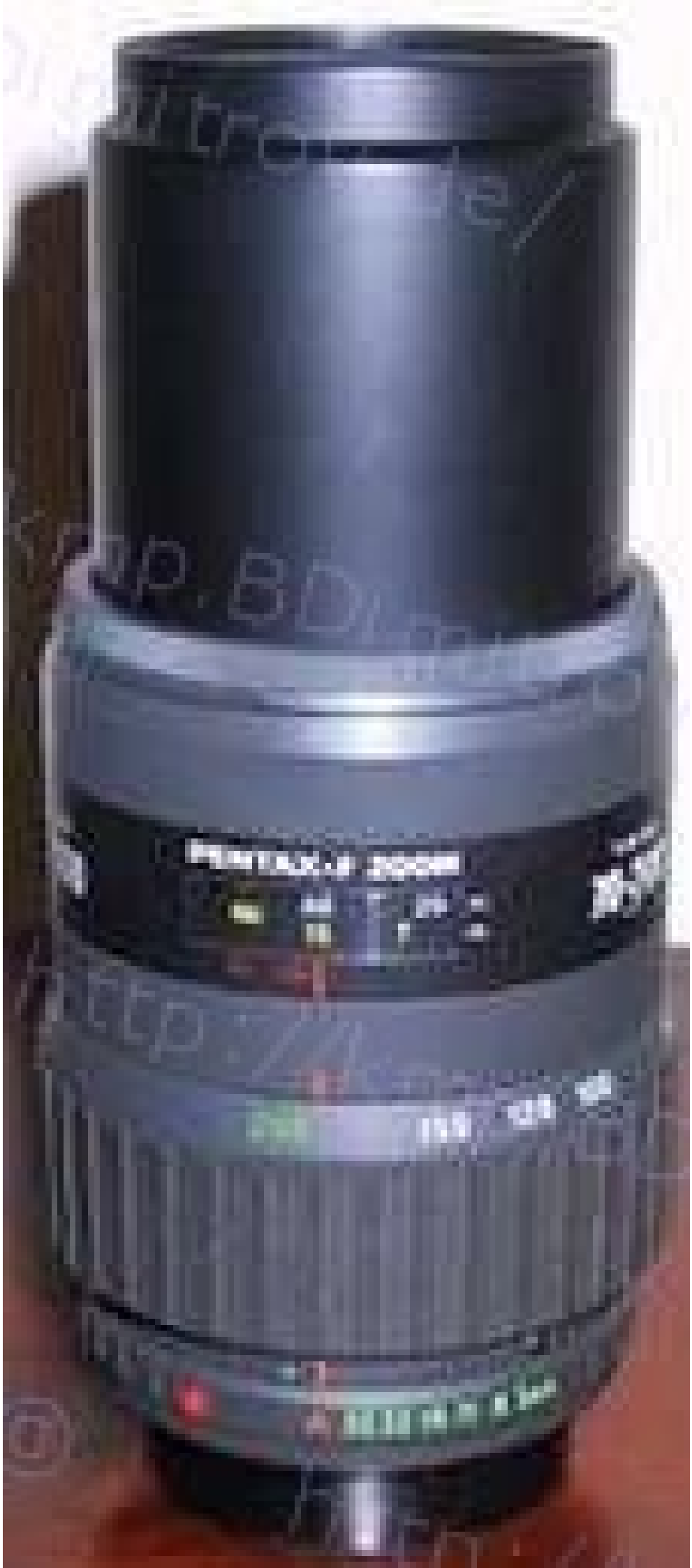

Mike Vredenburg ©2000

ZOOM
1:4.5-5.6
70-
FT
M